(12) STANDARD PATENT APPLICATION (11) Application No. **AU 2025202603 A1**
(19) AUSTRALIAN PATENT OFFICE

(54) Title
Hybrid conventional/air sprung suspension concept for a wheeled vehicle

(51) International Patent Classification(s)
B60G 11/56 (2006.01) *B60G 17/015* (2006.01)
B60G 13/16 (2006.01) *B60G 17/04* (2006.01)
B60G 15/10 (2006.01) *B60G 17/052* (2006.01)

(21) Application No: **2025202603** (22) Date of Filing: **2025.04.13**

(30) Priority Data

(31) Number	(32) Date	(33) Country
2024902808	**2024.09.05**	**AU**

(43) Publication Date: **2026.03.19**
(43) Publication Journal Date: **2026.03.19**

(71) Applicant(s)
Alexander Rein de Vlugt

(72) Inventor(s)
de Vlugt, Alexander

(74) Agent / Attorney
Alexander Rein de Vlugt, 65 Gregory Dr, Inverleigh, VIC, 3321, AU

ABSTRACT

The present invention provides a hybrid conventional and air sprung suspension concept for wheeled vehicle application where the air spring system is partial load carrying and provides improved vehicle dynamics and off-roadability performance. An external air reservoir is directly attached to both sides of the vehicle's air springs with negligeable air flow resistance. An optional one or more additional air reservoirs are connected to said external air reservoir and interconnected via one or more air flow restricting valves. In this disclosure the enhanced system is referred to as a split reservoir configuration.

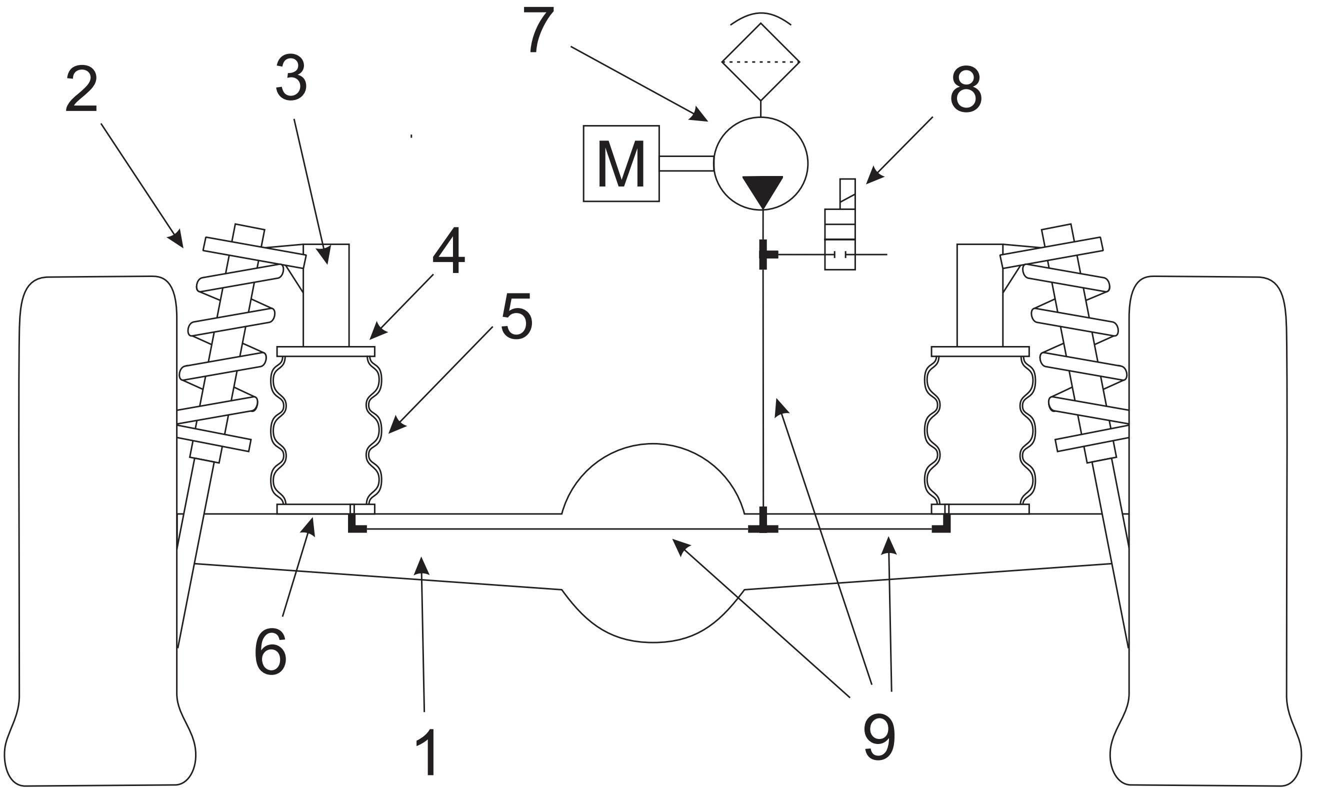

FIGURE 3

FIGURE 4

HYBRID CONVENTIONAL/AIR SPRUNG SUSPENSION CONCEPT WITH HIGH LOAD CARRYING CAPACITY AND IMPROVED VEHICLE DYNAMICS

TECHNICAL FIELD

[001] The present invention relates to the integration of a supplementary load carrying air spring system into a conventionally sprung wheeled vehicle for improved ride, handling, steering, off-road capability and increased load carrying capacity.

BACKGROUND OF THE INVENTION

[002] In the following paragraphs three vehicle metrics are being used to explain the merits of this invention disclosure. For better understanding these metrics will be explained first.

[003] About axle ride frequency. In its most simplified form vehicle ride characteristics can be represented in a so-called quarter car model as depicted in Figure 1. It is a one-dimensional mechanical model that aims to describe the most fundamental natural frequencies that govern vertical road induced vibration isolation for the front and rear end of the vehicle as separate systems. Based on representative corner weights of a vehicle and known tyre and primary spring stiffnesses both unsprung mass and sprung mass natural frequencies can be calculated for both axles of a vehicle. In the following paragraphs the sprung mass natural frequency is referred to as the axle ride frequency and the relationship between the front and rear sprung mass natural frequencies as the ride frequency ratio. The ratio between front and rear axle ride frequency is a commonly accepted concept among Vehicle Dynamics experts as a significant metric for vehicle ride comfort, in particular in support of developing vehicle body pitch control, hereafter referred to as pitch control.

[004] About critical body damping. Hydraulic suspension damping in passenger and light commercial vehicles is non-linear, but for small to medium road induced vibrations a linearised approach for damping is used as a meaningful metric to reflect on vehicle body heave control or lack of so-called floatiness. Critical damping is calculated from the mass properties, linearised spring and damper characteristics and is often in the range of 0.3, although variations can be seen based on a more comfortable or more sporty tuning philosophy. Hereafter vertical body control will be referred to as heave control and the combined vehicle pitch and heave control as body control.

[005] About roll couple distribution. Since the centre of gravity of a vehicle is positioned above ground level, during cornering the lateral acceleration of a vehicle is making equilibrium with the vertical, load carrying force vectors at each corner's tyre that exhibit a higher force on the outside corner wheels than on the inside corner wheels. See Figure 2 which displays a left-hand turning vehicle and the resulting vertical force vectors. The different amplitudes between the inside and outside vertical forces reflect the moment or force couple that counteract the vehicle's roll motion and are therefore referred to as the roll couple. It is the sum of both axles' roll couples that is responsible for the total vehicle's body roll control and, assuming rear and front track t are identical, obeying to the equation:

$$y_{cog} \cdot m_v \cdot a_z = (\Delta F_{\substack{\text{vertical}\\ \text{rear}}} + \Delta F_{\substack{\text{vertical}\\ \text{front}}}) \cdot t$$

but the distribution between the front and rear axle's roll couple, again assuming rear and front track t are identical, defined as:

$$\text{front axle \%} = \frac{\Delta F_{\substack{\text{vertical}\\ \text{front}}}}{(\Delta F_{\substack{\text{vertical}\\ \text{rear}}} + \Delta F_{\substack{\text{vertical}\\ \text{front}}})} \qquad \text{rear axle \%} = \frac{\Delta F_{\substack{\text{vertical}\\ \text{rear}}}}{(\Delta F_{\substack{\text{vertical}\\ \text{rear}}} + \Delta F_{\substack{\text{vertical}\\ \text{front}}})}$$

is a major factor in the over- and understeer behaviour. It is a commonly accepted concept among Vehicle Dynamics experts that deviations from a manufacturer's intended roll couple distribution cause risks for limit handling behaviour.

[006] Prior art supplementary load carrying air spring systems generally consist of entirely enclosed air springs installed on both sides of the vehicle, where control of the pressurisation is achieved by relatively small air feed connections attached to the spring seats on both vehicle sides' air springs and which often are interconnected for slow air pressure equalisation. See Figure 3. Figure 4 displays a typical example of a prior art fully enclosed air spring.

[007] While said prior art systems are capable of adjusting the vehicle ride height to the desired level while carrying additional load, they have negative implications for vehicle ride,

steering, handling and off-road capability, in particular when installed in addition to the OEM original spring and damper layout, ie in a typical after-market installation.

[008] Both in unladen and laden condition said prior art executions of air spring systems significantly upset the manufacturer’s suspension tuning in the following ways:

[009] A significant spring rate increase occurs which has a negative effect on the isolation of road induced vibrations and body control.

[010] Caused by the progressive nature of the spring rate of fully enclosed air springs, effective wheel travel in jounce direction is reduced and in laden condition leads to an excessive spring rate increase which in turn leads to poor body control.

[011] Both in unladen and laden conditions said increased spring rates lead to more oversteering handling behaviour, which can be difficult to control for the driver in emergency conditions.

[012] Said increased spring rate and progressiveness of spring rate reduce suspension articulation, which in turn leads to reduced off-road capability.

[013] Related Art:
US 2842359 A Pneumatic Cushion For Motor Vehicles
AU 2014248339 B2 Vehicle Suspension system with reservoir for air spring damping
US 11,097,588 B2 Vehicle Oscillation Control by Switchable Air Volume Suspension
US 6698730 B2 Dual Rate Air spring
US 2004/0251653 A1 Air Suspension
US 5374077 A Pneumatically Damped Vehicle Suspension System

[014] These prior art disclosures relate to full load carrying air spring systems and in some cases to hybrid systems where a mechanical spring system is put in series with an air spring system, but where said system still carries the full axle load. In these systems external reservoirs and air damping concepts are being discussed and used in a different context and on a different working principle than for the supplementary air spring system, which works in parallel to a conventional spring/damper system, only carries part of the axle’s load and which is the subject of this disclosure.

[015] Fundamental differences between these full load carrying systems on the one hand and the supplementary air spring systems on the other hand are the following.

[016] As a linearised metric around the operating wheel travel point, in a full load carrying air spring system the axle ride frequency is approximately constant if the ride height is controlled to the same height for different loading conditions. Said ride frequency can be designed into the system by the air spring dimensioning.

[017] For a supplementary air spring system with only partial load carrying function as installed per prior art the ride frequency as a linearised metric is usually not constant as a function of payload. This is depending on the dimensioning of the air spring system and due to volume constraints typically found in prior art installations, it means the ride frequency can even be rising with increased payload if the ride height is controlled to the same height for different loading conditions. In a typical aftermarket configuration, for light loads the added spring stiffness can amount to the same order of magnitude as the already installed conventional spring stiffness, leading to an increase in ride frequency of up to 20%. If the ride frequency is also rising with payload, vehicle comfort in terms of isolation of road induced disturbances and body control is further compromised under said load conditions.

[018] Heavy trucks, which are typically designed with full load carrying air springs, have a more extreme load ratio spread between unladen and laden conditions in comparison to passenger vehicles and light trucks. This spread requires a suspension damping behaviour that increases with load and is robust. For this purpose, these systems tend to rely on air damping which increases with the density of the air as it compresses under increased payload without adjustable valve settings. The achievable amount of critical damping (typically <0.2) is insufficient for passenger vehicles and light trucks, which means that in such applications in addition to air damping also hydraulic dampers would have to be installed to reach a critical damping much closer to 0.3. This is one of the reasons why passenger and light truck vehicles rely on hydraulic damping irrespective of the concept of the spring system.

[019] External air reservoirs in full load carrying air spring systems are essential for creating air damping and in many disclosures of prior art on these systems the claims related to these reservoirs deal with refinement of this damping, eg with respect to targeted frequencies, interconnectivity between axles, limiting wheel travel, creating discreetly switchable ride frequencies etc.

SUMMARY OF THE INVENTION

[020] The present invention incorporates features and components that are intended to maintain the vehicle manufacturer's optimal suspension tuning for unladen and lightly laden conditions, and to reproduce said optimal suspension tuning for higher loading conditions.

[021] The first feature in present invention is the inclusion of an additional, external to the air spring, air reservoir (10 in Figure 5) which may or may not be split in two or more compartments. The latter execution has added benefits explained under the detailed description of embodiments (see Figure 6)

[022] The second feature in present invention is the inclusion of a connection between both side of the vehicle's air springs with a negligible air flow restriction with respect to suspension movement induced air displacements.

[023] The third feature in present invention is in the case of a split external air reservoir the inclusion of an adjustable airflow restriction between the primary and secondary air reservoir and optionally additional adjustable airflow restrictions if the workable volume of the air spring system has been subdivided into more than two reservoirs. The purpose of the adjustable airflow restrictions is to allow unrestricted airflow between all compartments of the split reservoir for light payload conditions and an increased amount of air flow restriction for higher payloads that can be tuned for the individual valves to perform optimally over the entire payload range.

[024] The purpose of one or more added air reservoirs is to reduce the added spring stiffness caused by the partial load carrying air spring system. This results into improved isolation of road induced vibrations and a reduction of the payload dependent ride frequencies and consequently a reduction of the ride frequency ratio span relative to the other axle or axle group in the vehicle.

[025] By integrating said external air reservoir, and in the case of a split reservoir system the primary reservoir, into a low restriction air connection between both sides of the vehicle's air springs the system does not create any additional roll stiffness. Often load carrying capacity is limited by the vehicle's tendency to oversteering handling when the centre of gravity is

migrating backwards in the vehicle due to payload. Elimination of added rear axle roll stiffness prevents a rearwards migration of the roll couple distribution, which enables a larger margin before oversteer becomes critical during emergency manoeuvres. In addition, unrestricted airflow between said air springs improves suspension articulation which is beneficial for ride comfort and off-road performance.

[026] The inclusion of the split in the external air reservoir, the optional addition of extra reservoirs and said controllable air flow restrictions serve the dual purpose of blending different load dependent axle ride frequency characteristics into a single more favourable load dependent characteristic as well as creating a load dependent increased damping caused by airflow hysteresis.

BRIEF DESCRIPTION OF THE DRAWINGS

[027] A detailed description of preferred embodiments will follow, by way of example only, with reference to the accompanying figures of the drawings, in which:

Figure 1 depicts the most basic vehicle ride comfort model, a so-called quarter car model in which body mass, axle or unsprung mass, tyre stiffness, primary spring stiffness and hydraulic damper values have been used to most closely reflect the front axle or rear axle vertical dynamic properties.

Figure 2 depicts a simple vehicle taking a left-hand turn. On the right-hand side of the figure are front view projections of the front and rear axle, displaying the vertical load carrying forces being different on the inside corner and outside corner wheels.

Figure 3 is a simplified depiction of a vehicle with a typical prior art supplementary air spring system layout, for reference only. In this instance a vehicle is depicted with a live rear axle and a coil-over-damper, also known as McPherson or strut spring/shock damper layout. The following components and parts are depicted: 1 axle body, 2 spring/hydraulic damper unit, 3 chassis frame, 4 upper air spring seat, 5 air spring, 6 lower air spring seat, 7 compressor unit, 8 blow off valve, 9 air feed and evacuation lines

Figure 4 displays a fully enclosed single airbag style air spring as a typical application in prior art supplementary air spring systems.

Figure 5 is a simplified depiction of a vehicle with a supplementary air spring system layout including a single external air reservoir as disclosed in this invention description. In this instance a vehicle is depicted with a live rear axle and a coil-over-damper, also known as McPherson or strut spring/hydraulic damper layout. The exact conventional spring and hydraulic damper layout is inconsequential for the working principle of this invention, this layout is only shown as an example. The following components and parts are depicted: 1 axle body, 2 spring/hydraulic damper unit, 3 chassis frame, 4 upper air spring seat, 5 air spring, 6 lower air spring seat, 7 compressor unit, 8 blow off valve, 9 air feed and evacuation lines, 10 external air reservoir with large cross section connections to the air springs.

Figure 6 depicts an enhancement of the system displayed in Figure 5. It includes a further external air reservoir 12 that is connected to the primary reservoir 11, which replaces reservoir 10 from Figure 5. Valve configuration 13 represents a fixed airflow restriction. Alternative valve configuration 14 represents an adjustable valve to enable optimised performance under varying loading conditions.

Figure 7 depicts the installed primary vehicle spring stiffness including jounce bumper in N/mm on the vertical axis as a function of wheel travel in mm on the horizontal axis for an unmodified Ford Ranger Raptor as well as the combined spring stiffness of the factory spring, jounce bumper and the added air spring stiffness from a prior art system as exposed to adiabatic compression around the unladen ride height position.

Figure 8 depicts the rear axle ride frequency in Hz on the vertical axis as a function of payload in kg on the horizontal axis for an unmodified Ford Ranger Raptor as well as the same vehicle with an installed prior art partially load carrying air spring system. For reference + 5% and - 5% ride frequency variation relative to unladen factory settings are displayed with the dotted lines.

Figure 9 depicts the amount of critical damping for the rear axle ride motion on the vertical axis as a function of payload on the horizontal axis in kg for an unmodified Ford Ranger Raptor as well as the same vehicle with an installed prior art system. For reference an aspirational lower target limit of -20% is displayed with the dotted line.

Figure 10 depicts the overlay of the primary spring stiffness of the disclosed single reservoir configuration with 27.6 liter volume to the graphs of Figure 7

Figure 11 depicts the overlay of the ride frequency of the disclosed single reservoir configuration with 27.6 liter volume to the graphs of Figure 8

Figure 12 depicts the overlay of the critical damping of the disclosed single reservoir configuration with 27.6 liter volume to the graphs of Figure 9

Figure 13 depicts the overlay of the ride frequency of the disclosed single reservoir configuration with 8.8 liter volume to the graphs of Figure 11

Figure 14 depicts the overlay of the critical damping of the disclosed single reservoir configuration with 8.8 liter volume to the graphs of Figure 12

Figure 15 depicts the expected characteristic of the ride frequency of the disclosed split reservoir configuration with 8.8 liter primary and 18.8 liter secondary volume as an overlay to the graphs of Figure 13

Figure 16 depicts the expected characteristic of the critical damping of the disclosed split reservoir configuration with 8.8 liter primary and 18.8 liter secondary volume as an overlay to the graphs of Figure 14

Figure 17 depicts a further enhancement of the system displayed in Figure 6. It includes additional external air reservoirs 16 and 17 that are connected to the primary reservoir 15, which replaces reservoir 11 from Figure 6 as in an optimised configuration this would have a different volume.

Figure 18 depicts an enhancement of the system displayed in Figure 6. It includes a variable air volume external air reservoir 18 that is connected to the primary reservoir 11, and replaces the fixed volume reservoir 12 from Figure 6.

Figure 19 depicts in three different views a prototype embodiment of an upper air spring seat, displaying large cross section port/spout 19 which connects the air spring inner volume with the external air reservoir with negligeable resistance.

Figure 20 depicts an alternative embodiment of an upper air spring seat with a different routing of the large cross section port/spout 20 for unrestricted airflow to the external air reservoir.

Figure 21 displays the embodiment of the assembly outside of the vehicle of both vehicle side's air springs connected to a single external reservoir by means of large cross-section pressure rated hoses and T-section. In the foreground can be seen the relatively small air feed and evacuation hoses, which are connected to the lower spring seats of the air springs.

Figure 22 displays the embodiment of a split reservoir system assembly outside of the vehicle where the primary air reservoir consists of both vehicle side's air springs 5, hoses 21, tubes 22 and T-section 23. Air flow regulating valve 14 controls the restriction to the secondary external air reservoir 26 through hose 24 and couplings 25.

Figure 23 displays the embodiment of the individual components of the system in Figure 22 as an exploded view.

Figure 24 shows the installation of the left-hand side air spring in a rear view with upper spring seat 4.

Figure 25 shows the embodiment of the air flow control valve 14, connected in rearward vehicle direction to hose 24, to the left-hand side via T-coupling 23 to hose 21 and tube 22, which lead to the left-hand side upper spring seat 4 from Figure 19. On top of flow control valve 14 can be seen the lateral spindle rod 27 for remote access operation of the valve setting.

Figure 26 shows the embodiment of valve 14 under a slightly different angle from Figure 24. From this angle tube 22 and hose 21 can be seen more clearly connecting to the left-hand side upper spring seat 4. The connecting arrow between Figure 24 and Figure 26 are pointing at the same point in vehicle, the left-hand side upper spring seat 4.

Figure 27 shows the installation of the right-hand side air spring, looking from the left-hand side towards the right-hand side.

Figure 28 shows the embodiment of a subframe with the dual function of supporting and conveying the load carrying forces of the air springs as well as providing the primary external air reservoir in a split system. Spout 28 is the connection to the air flow control valve. Alternatively with this spout terminated this would function as the external reservoir of a single volume system. This assembly is depicted upside down: the blank lower spring seats are to be supported by the axle body and the subframe would be supported by the chassis frame or unibody structure in case of application in a vehicle with unibody architecture.

DETAILED DESCRIPTION OF EMBODIMENTS

[028] The description of the embodiments is based on the execution as implemented on a MY24.5 Ford Ranger Raptor test vehicle, however the applied concepts, theory and logic can be applied for any wheeled vehicle for enhanced load carrying capacity and improved Vehicle Dynamics performance at higher payloads.

[029] Illustrated in Figure 4 is a typical example of prior art air spring assemblies including upper and lower spring seat for reference purpose only.

[030] In the following explanation the unmodified MY24.5 Ford Ranger Raptor will be referred to as the standard configuration. The prior art partial load carrying air spring system based on fully enclosed air springs as depicted in Figure 3 and 4 will be referred to as the prior art configuration. The novel system in this disclosure with a single external air reservoir as depicted in Figure 5 will be referred to as the disclosed single reservoir configuration. The novel system in this disclosure with a split external reservoir and air restriction between the two compartments as depicted in Figure 6 will be referred to as the disclosed split reservoir configuration.

[031] In Figure 7 can be seen that the additional spring rate of a prior art configuration is significant and the progressive spring rate in jounce direction surpasses even the higher spring aid stiffness region of the standard configuration by a large margin. As a result a large portion of the jounce wheel travel is not usable and this characteristic results in poor road induced vibration isolation and reduced suspension articulation for off-road use. For reference, aspirational target lines of +5% and -5% stiffness have been included.

[032] In Figure 8 can been seen that the standard configuration exhibits a falling rear axle ride frequency as a function of payload, while the prior art configuration has a significantly higher rear axle ride frequency and exhibits a rising trend under payload. For best vehicle pitch control, it is desirable to have a constant or slightly falling rear ride frequency as a function of payload as the ratio to the front axle ride frequency is aimed to remain constant and almost all payload will be carried by the rear axle. For reference, aspirational target lines of +5% and -5% ride frequency have been included.

[033] In Figure 9 can be seen that the standard configuration exhibits a falling critical damping. For best vehicle body control a constant amount of critical damping for increasing payload is preferred. With non-adjustable components a falling amount of critical damping is unavoidable by laws of physics. It reflects a slightly reduced heave control over road undulations. For the prior art configuration, the graph both starts at a lower point at light payload as well as falls faster as a function of added payload due to not only the added mass of the payload, but also the higher spring rates, which rise to even higher values as a function of payload. These characteristics are undesirable from a body control perspective. For reference, an aspirational target line of -20% critical damping has been included.

[034] In Figure 10 the combined conventional and air spring stiffness of the disclosed single reservoir configuration is overlaid with the standard configuration and the prior art configuration for light loading conditions. With an installed combined air spring and reservoir volume of 27.6 liter the spring stiffness follows much more closely the standard configuration than the prior art configuration. As a result, both better vibration isolation as well as better pitch control is exhibited than the prior art configuration under influence of road undulations.

[035] In Figure 11 the effect of an external single air reservoir volume in the disclosed single reservoir configuration is overlaid with the rear ride frequency characteristics of the standard configuration and the prior art configuration. With an installed combined air spring and reservoir volume of 27.6 liter the axle ride frequency is for all payloads much closer to the standard configuration than the prior art configuration and stays for higher payloads longer within the target lines than the standard configuration.

[036] In Figure 12 the effect of an external air reservoir in the disclosed single reservoir configuration is overlaid with the critical damping characteristics of the standard configuration and the prior art configuration. With an installed combined air spring and reservoir volume of 27.6 liter the rear axle critical damping is slightly lower than the standard configuration, but higher than the prior art configuration and for all payloads closer to the standard configuration.

[037] Consistent with the phenomena observed in Figure 11 and 12 a significant improvement in road induced vibration isolation and body control from the disclosed single reservoir system is occurring over the prior art configuration. In a comparison over payload with the standard configuration the disclosed single reservoir exhibits a lower critical damping amount, but stays longer within the ride frequency target zone and consistent with that a comparable pitch control is occurring, combined with slightly better road induced vibration isolation and slightly less controlled heave motion.

[038] In Figure 13 the difference between an installed combined air spring and reservoir volume of 8.8 liter and 27.6 liter in the disclosed single reservoir configuration is compared and overlaid with the ride frequency characteristics of the standard configuration and the prior art configuration. The characteristic for the 8.8 liter configuration has been established for an increased amount of 400 kg. With an installed volume of 8.8 liter the ride frequency is for the maximum payload now higher than the standard configuration without payload. It can be concluded from this data that for an optimisation of the ride frequency ratio over payload it would be beneficial to have an adjustable air reservoir volume that is set to maximum volume for light loads and a smaller volume for higher loads.

[039] In Figure 14 the difference between an installed combined air spring and reservoir volume of 8.8 liter and 27.6 liter is compared and overlaid with the critical damping characteristics of the standard configuration and the prior art configuration. With an installed volume of 8.8 liter the amount of critical damping is over the entire payload range lower than with 27.6 liter volume.

[040] From the results from Figure 13 and Figure 14 it follows that it is desirable to achieve a variable volume effect. Instead of creating an adjustable volume single reservoir an adjustable air flow restriction between the primary volume and the secondary volume has been implemented and analysed in the following paragraphs. With this set-up the dual purpose is served that not only the ride frequency can be influenced as a function of payload, but also in restricting the airflow to the secondary volume hysteresis and as a result critical damping is added.

[041] In the embodiment of the disclosed split reservoir configuration on the test vehicle a combined primary volume of air spring and reservoir has been created of 8.8 liter and a

secondary volume separated by the air flow control valve of 18.8 liter. In lightly laden condition the air flow restriction is set to negligible, which results into a functional behaviour of the disclosed single reservoir configuration with a 27.6 (8.8 +18.8) liter volume. For a trimmed air restriction valve the exact amount of hysteresis and damping effect is difficult to determine by analytical means and therefore the optimum setting for the valve has been selected by subjective evaluation of vehicle body heave and pitch motions. As a function of varying load conditions, the air flow restriction has been set to these subjectively tuned levels. Because the optimised air flow restriction never isolates the secondary volume completely, a virtual volume is created between 8.8 and 27.6 liter leading to a ride frequency closer to the target. In Figure 15 is the expected tunable range for ride frequency characteristic displayed for a disclosed split reservoir configuration with 8.8 and 18.8 liter volume split and tuned valve setting for varying payload. In Figure 16 is the expected tunable range for critical damping characteristic displayed for said configuration.

[042] In subjective vehicle evaluations it has been determined that both single reservoir and split reservoir configurations exhibit ride, handling, steering and off-roadability improvements over the standard and the prior art systems as follows.

[043] A comparison of the single reservoir configuration and the split reservoir configuration to the standard configuration in lightly laden conditions where both disclosed systems perform similarly. Road induced vibrations marginally higher than standard, heave control similar, pitch control similar. Handling and steering similar. Off-roadability similar. Only a professional expert level driver would determine differences between these configurations.

[044] A comparison of the single reservoir configuration and the split reservoir configuration to the prior art configuration in lightly laden conditions, where both disclosed systems perform similarly. Road induced vibrations significantly lower than prior art, heave control better, pitch control better. Handling and steering better due to absence of oversteer. Off-roadability better due to more available suspension articulation.

[045] A comparison of the single reservoir configuration to the standard configuration in GVM condition. Road induced vibrations significantly lower than the standard configuration due to slightly lower critical damping and improved residual wheel travel by virtue of the ride height control, heave control less than standard due to reduced critical damping, pitch

control better than standard due to axle ride frequency being closer to unladen standard axle ride frequency despite reduced critical damping. Handling and steering similar. Off-roadability better due to much improved ground clearance and more linear suspension articulation.

[046] A comparison of the split reservoir configuration to the standard configuration in GVM condition. Road induced vibrations significantly lower than standard due to improved residual wheel travel by virtue of the ride height control, heave control similar to standard, pitch control improved due to better rear ride frequency combined with subjectively determined, similar critical damping. Handling and steering similar. Off-roadability better due to much improved ground clearance and more linear suspension articulation.

[047] A comparison of both disclosed configurations to the standard configuration in loading conditions beyond approved GVM for the test vehicle. For all sub-attribute criteria of ride handling, steering and off-roadability both disclosed configurations perform better than the standard configuration due to the standard vehicle running out of wheel travel in full jounce and reaching the limits of oversteering handling earlier. The split reservoir configuration outperforms the single reservoir configuration because it exhibits more critical damping and a ride frequency more closely matching the lightly laden standard configuration.

[048] A comparison of both disclosed configurations to the prior art configuration in loading conditions up to and beyond approved GVM for the test vehicle. For all sub-attribute criteria of ride, handling, steering and off-roadability the single and split reservoir configurations perform much better than the prior art configuration due to said configuration missing all relevant metrics targets: too high ride frequencies, too much wheel rate progression, too short wheel travel, too little critical damping and too much rear biassed roll couple distribution for all loading conditions.

[049] As can be seen in Figure 15 and Figure 16 there is an opportunity to create additional load dependent axle frequency and critical damping characteristics between and beyond the 8.8 liter and 27.8 liter lines that are more favourable and could create additional opportunities for optimising the balance between these characteristics by adjusting airflow control valves. For this reason, it would be beneficial to create either a further split in the secondary volume as illustrated in Figure 17 or apply an adjustable secondary volume as illustrated in Figure 18.

[050] In this disclosure both background and embodiment explanations and examples have been described based on a vehicle's rear axle implementation. An implementation of this disclosed invention on both axles of the vehicle or on the front axle instead of the rear axle has no bearing on the fundamental principles and logic applied. All claims following apply for any implementation on any axle of a wheeled vehicle.

[051] Figure 19 depicts a prototype upper spring seat where openings 19 constitutes a low resistance flow port and spout for the air spring internal volume to be connected to an external volume. Figure 20 depicts alternative prototype upper spring seats with port and spout openings 20. By prototype experimenting it has been determined that for the chosen test vehicles (Ford Ranger Raptor MY 21.25 and MY24.5) a 50 mm diameter tube section and a 1850 mm^2 cross section port in the upper spring seat create large enough areas for negligeable air flow resistance.

[052] Figure 21 depicts the execution of a single external reservoir configuration of the present invention where said reservoir is connected through a T-section tube and 50 mm diameter pressure rated hoses through the upper spring seats as depicted in Figure 20 with both air springs.

[053] Figure 22 depicts, outside of the vehicle, the assembled execution of the split external reservoir configuration of the present disclosure where the primary volume 11 (See Figure 6) constitutes of the internal volume of the air springs 5, the large cross section hoses 18 and the extended length tube connection 19 to the T-section 20 which leads to the air flow control valve 14. The secondary volume 12 (See Figure 6) of said execution constitutes of the hose section 21 and couplings 22 to the air reservoir 23. The flow restriction is created by an industrial ball valve 14 with 50 mm internal diameter that can be trimmed to the desired air flow resistance.

[054] Figure 23 depicts the individual components pertaining to Figure 22

[055] Figure 24 to Figure 27 depict installation details of the embodiment of the split reservoir system into the test vehicle.

[056] Figure 28 depicts an alternative method to create a single or primary reservoir as part of the load carrying structure.

CLAIMS

1. The inclusion of an air reservoir external to the air springs in a supplementary load carrying air spring system for wheeled vehicles which is connected to both vehicle sides' air springs with negligeable resistance to suspension induced air flow.
2. The inclusion of two or more air reservoirs external to the air springs in a supplementary load carrying air spring system for wheeled vehicles where the primary volume is connected to both vehicle sides' air springs with negligeable resistance to suspension induced air flow.
3. The inclusion of a fixed or adjustable air flow restriction control valve in the system as described in claim 2 between the primary and secondary reservoir.
4. The inclusion of fixed or adjustable air flow restriction control valves between any of the reservoirs if a system as in claim 2 is subdivided into more than 2 reservoirs.
5. The inclusion of automatically operated load dependent flow restriction control valves for the valves as described in claims 3 and 4 if they are adjustable.
6. The inclusion of an adjustable volume reservoir as the secondary reservoir in the system described in claim 2.
7. The inclusion of an automatically operated load dependent operated volume adjustment for the reservoir in claim 6.
8. The incorporation of claims 1, 2, 3, 4, 5, 6, 7 on any axle of a multi-axle wheeled vehicle.

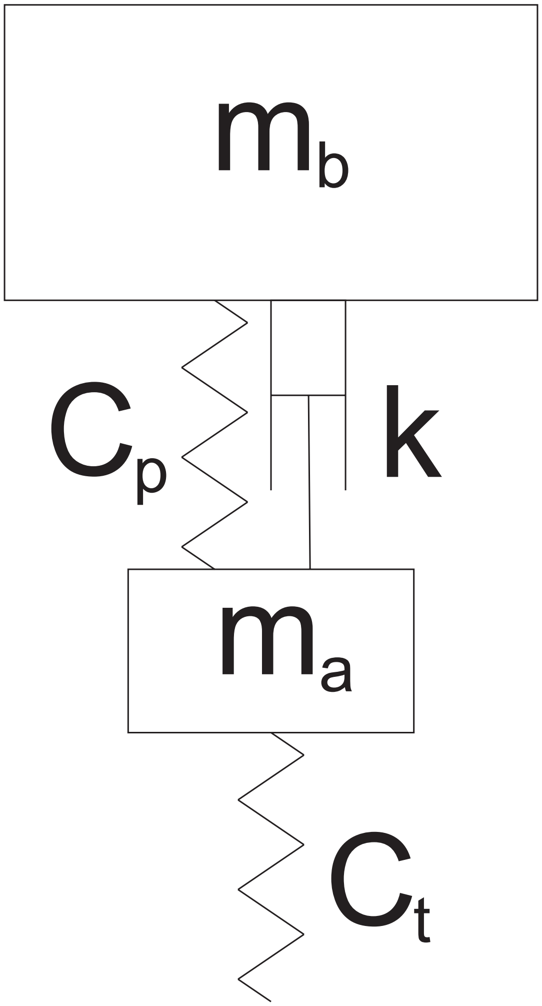

FIGURE 1

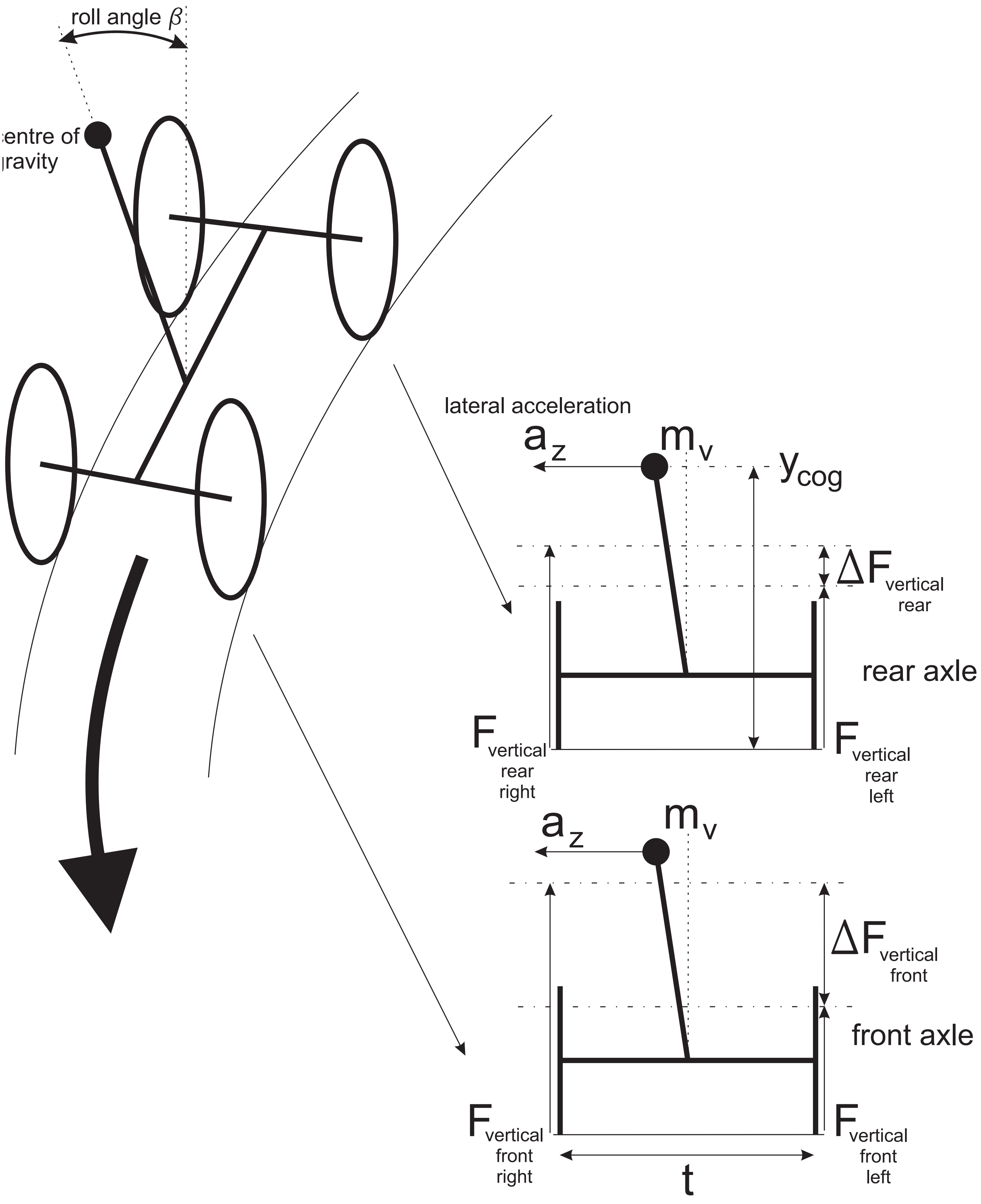
roll angle β
entre of
ravity
lateral acceleration
a_z
m_v
y_{cog}
$\Delta F_{vertical\ rear}$
rear axle
$F_{vertical\ rear\ right}$
$F_{vertical\ rear\ left}$
a_z
m_v
$\Delta F_{vertical\ front}$
front axle
$F_{vertical\ front\ right}$
$F_{vertical\ front\ left}$
t

FIGURE 2

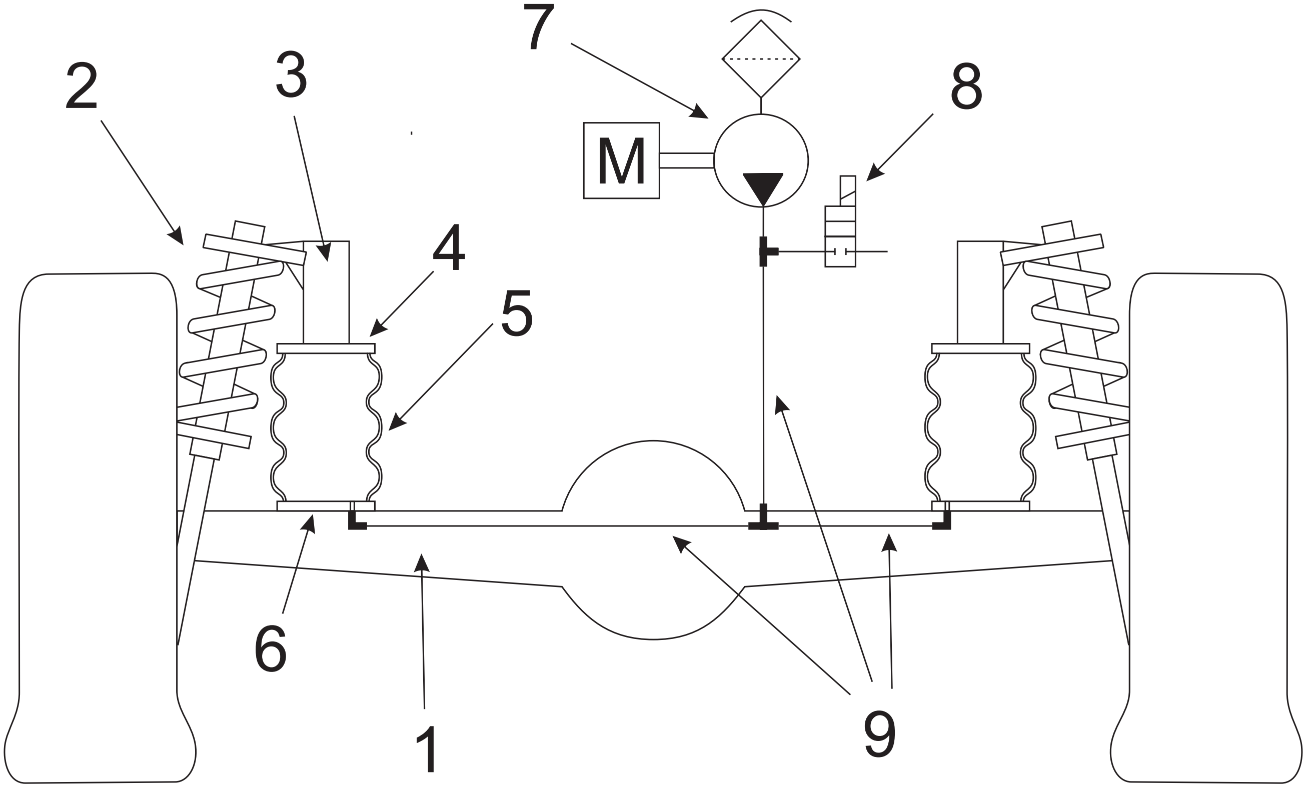

FIGURE 3

FIGURE 4

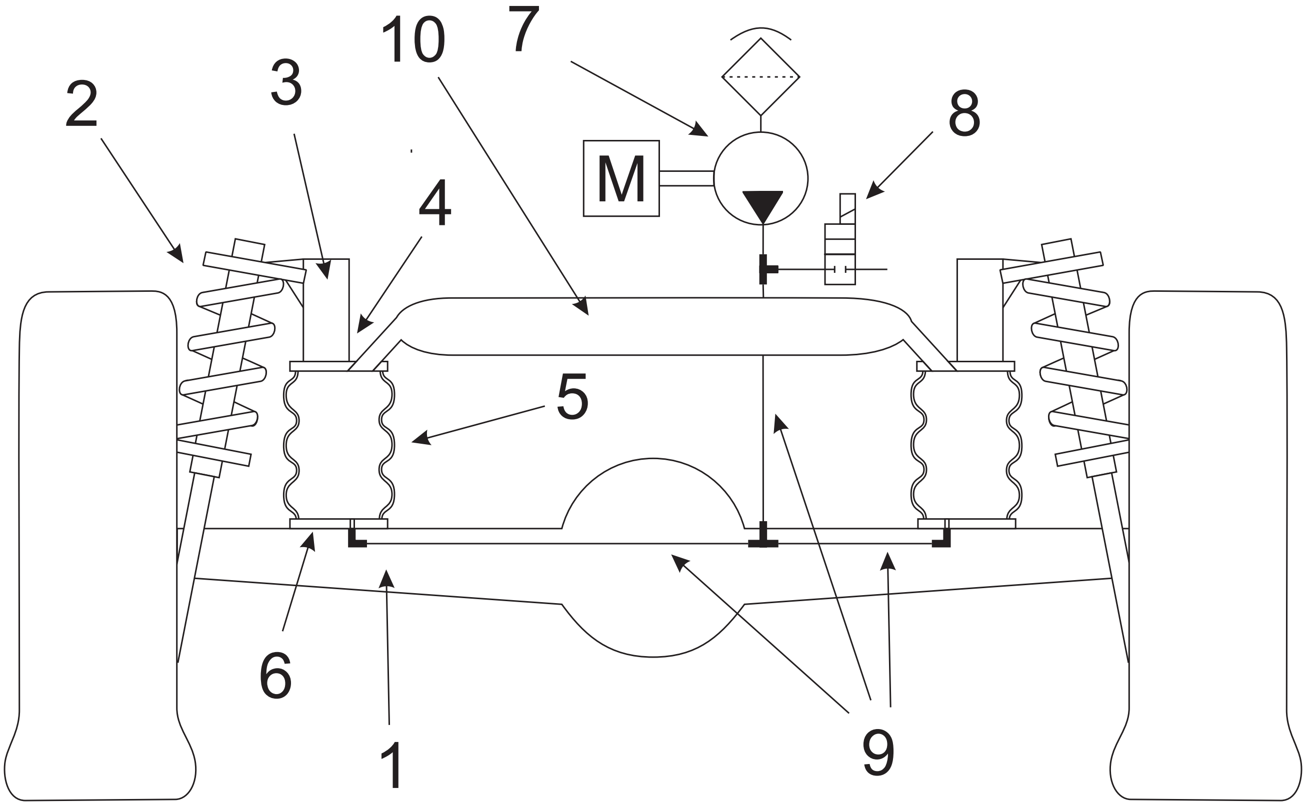

FIGURE 5

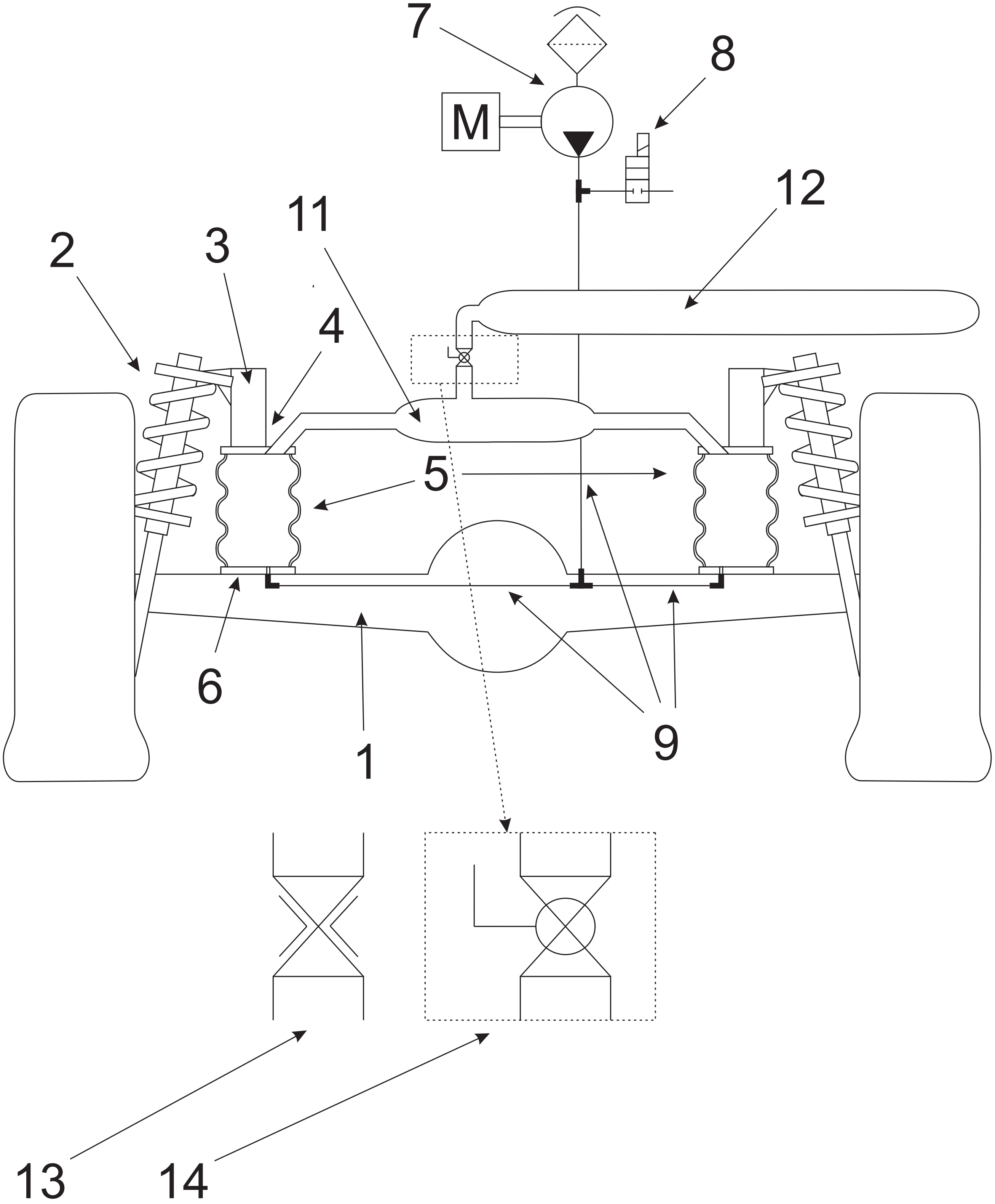

FIGURE 6

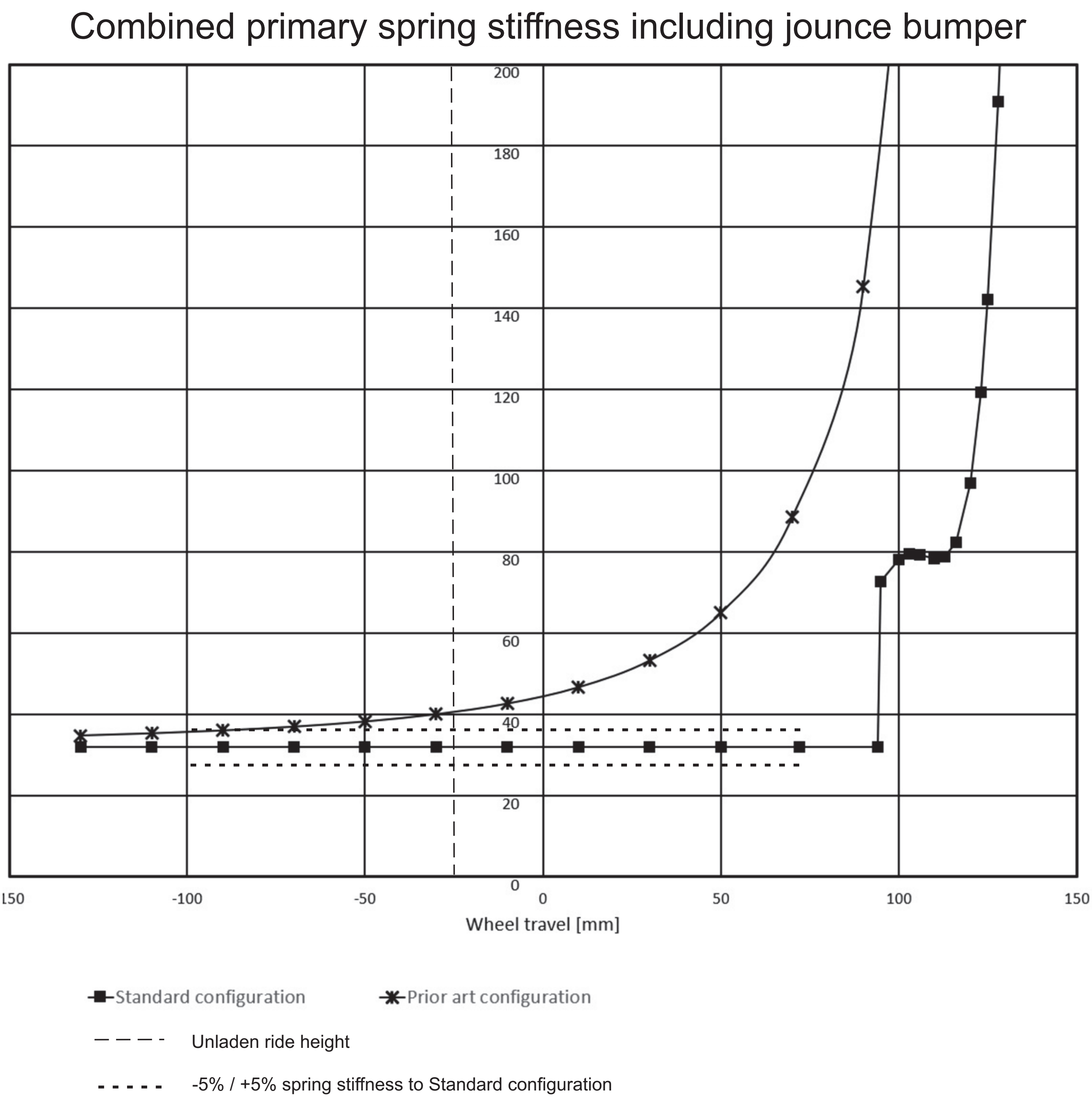
Combined primary spring stiffness including jounce bumper
200
180
160
140
120
100
80
60
40
20
0
150
-100
-50
0
50
100
150
Wheel travel [mm]
Standard configuration
Prior art configuration
Unladen ride height
-5% / +5% spring stiffness to Standard configuration

FIGURE 7

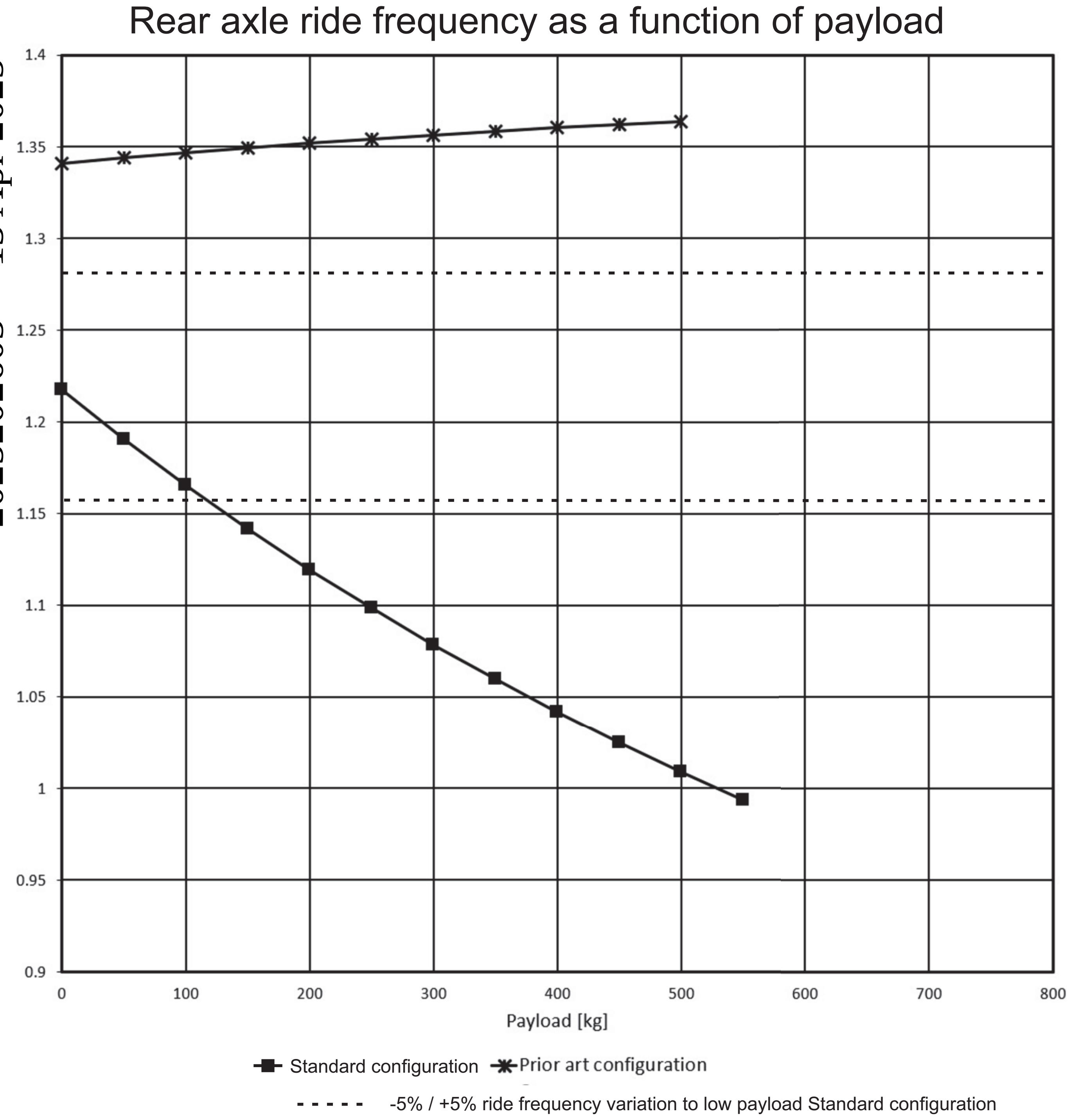
Rear axle ride frequency as a function of payload
1.4
1.35
1.3
1.25
1.2
1.15
1.1
1.05
1
0.95
0.9
0
100
200
300
400
500
600
700
800
Payload [kg]
Standard configuration
Prior art configuration
-5% / +5% ride frequency variation to low payload Standard configuration

FIGURE 8

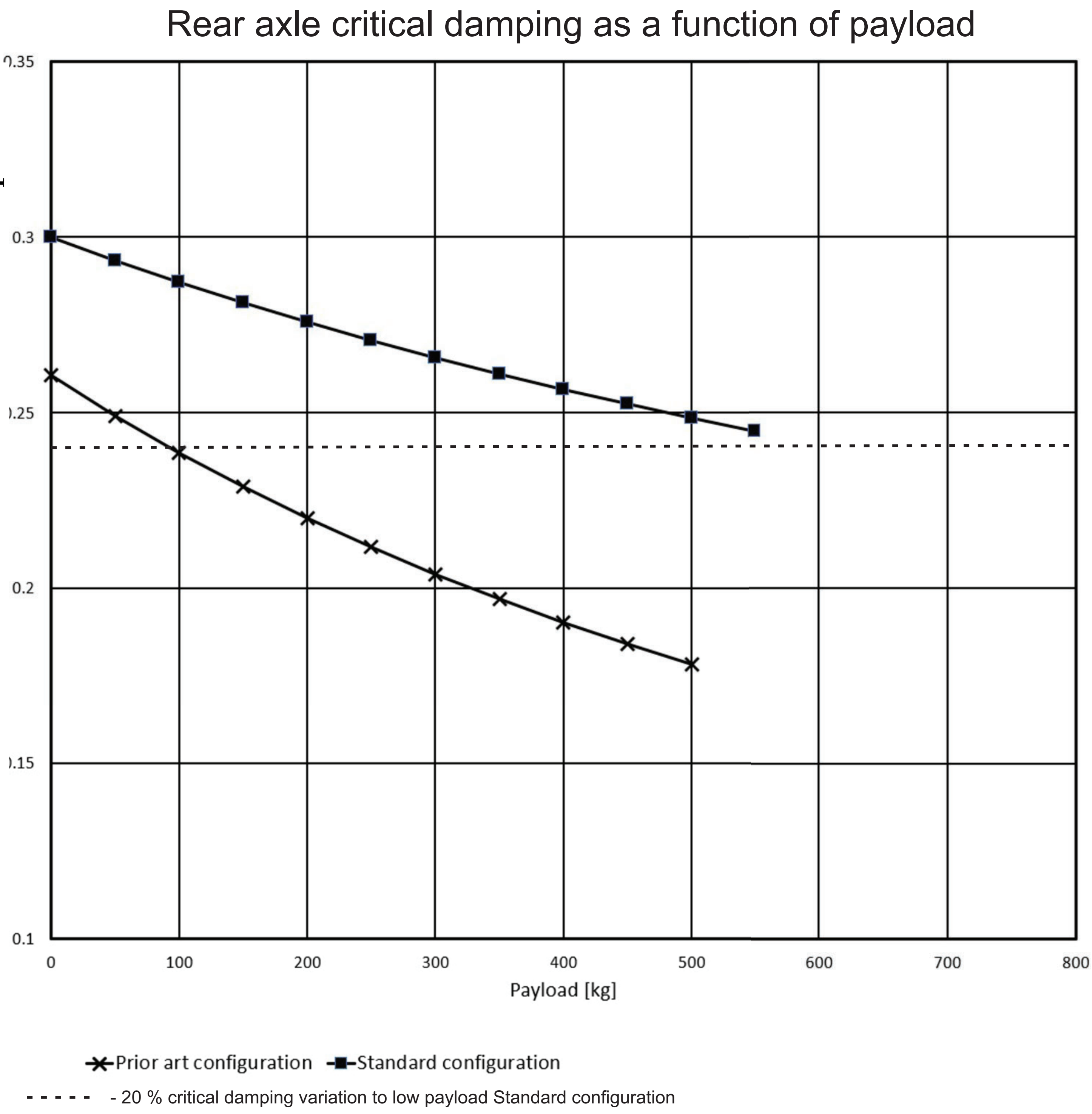
Rear axle critical damping as a function of payload
0.35
0.3
0.25
0.2
0.15
0.1
0
100
200
300
400
500
600
700
800
Payload [kg]
Prior art configuration
Standard configuration
- 20 % critical damping variation to low payload Standard configuration

FIGURE 9

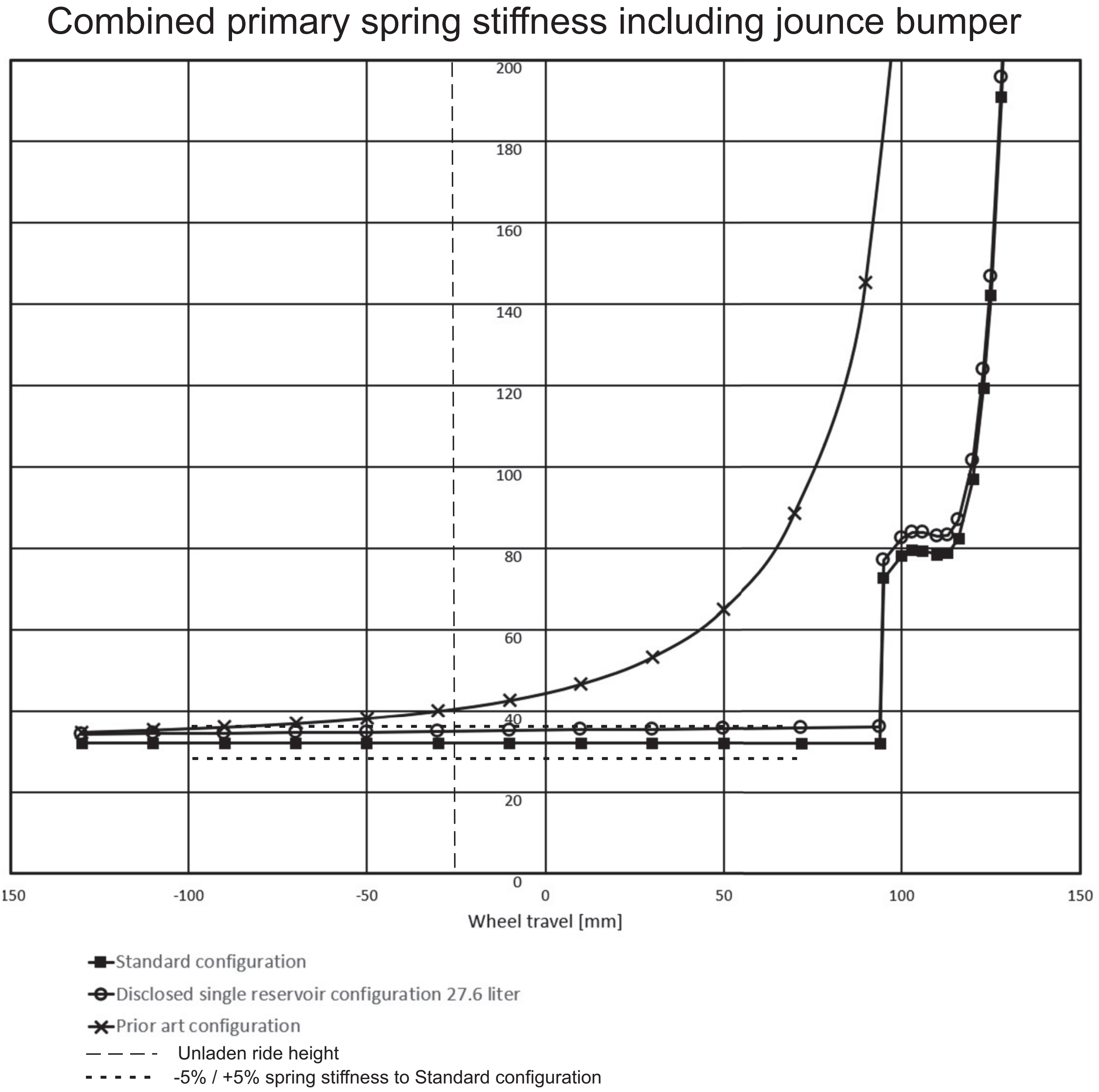
Combined primary spring stiffness including jounce bumper
200
180
160
140
120
100
80
60
40
20
0
150
-100
-50
0
50
100
150
Wheel travel [mm]
Standard configuration
Disclosed single reservoir configuration 27.6 liter
Prior art configuration
Unladen ride height
-5% / +5% spring stiffness to Standard configuration

FIGURE 10

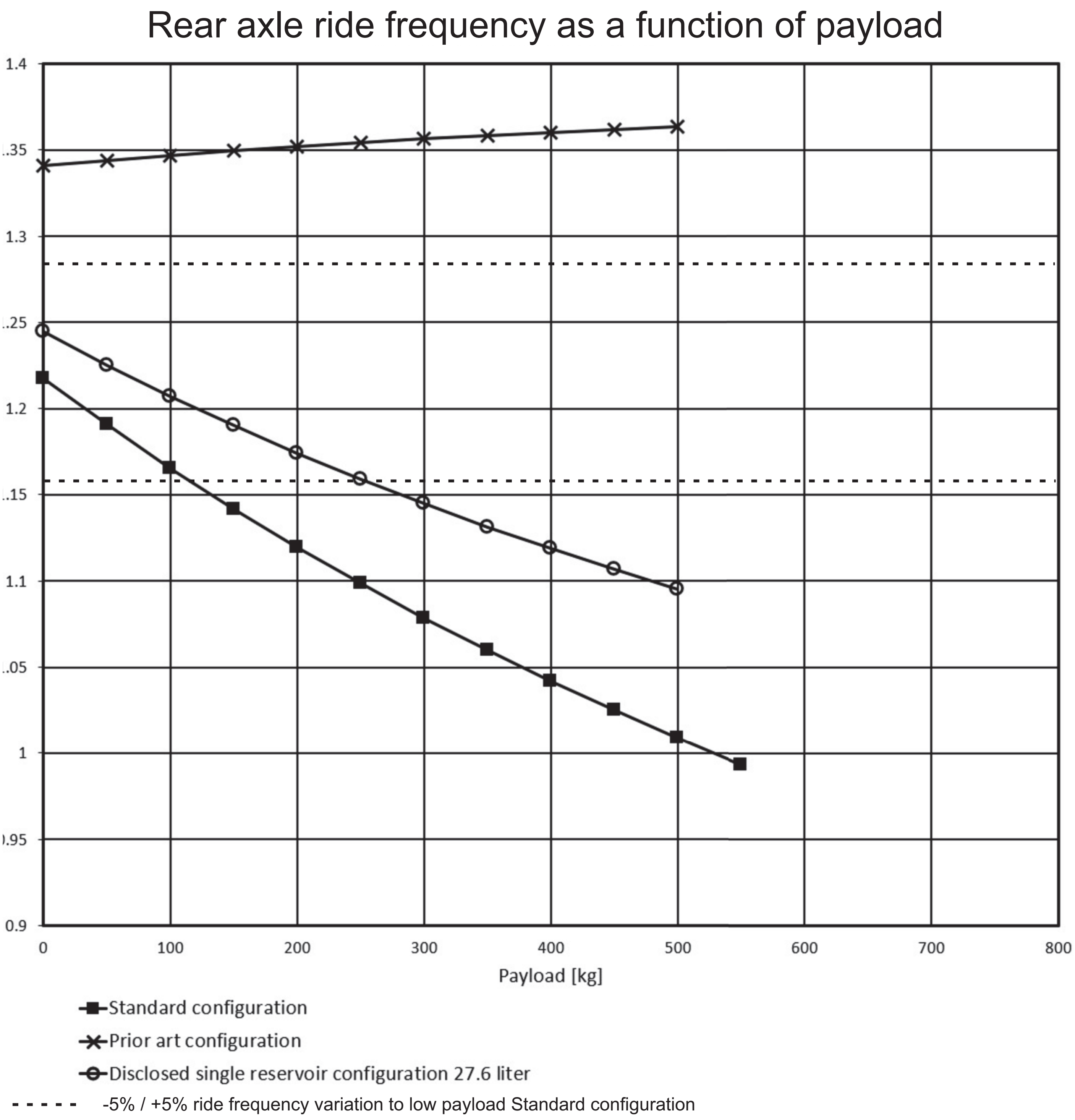
Rear axle ride frequency as a function of payload
1.4
.35
1.3
.25
1.2
.15
1.1
.05
1
.95
0.9
0
100
200
300
400
500
600
700
800
Payload [kg]
Standard configuration
Prior art configuration
Disclosed single reservoir configuration 27.6 liter
-5% / +5% ride frequency variation to low payload Standard configuration

FIGURE 11

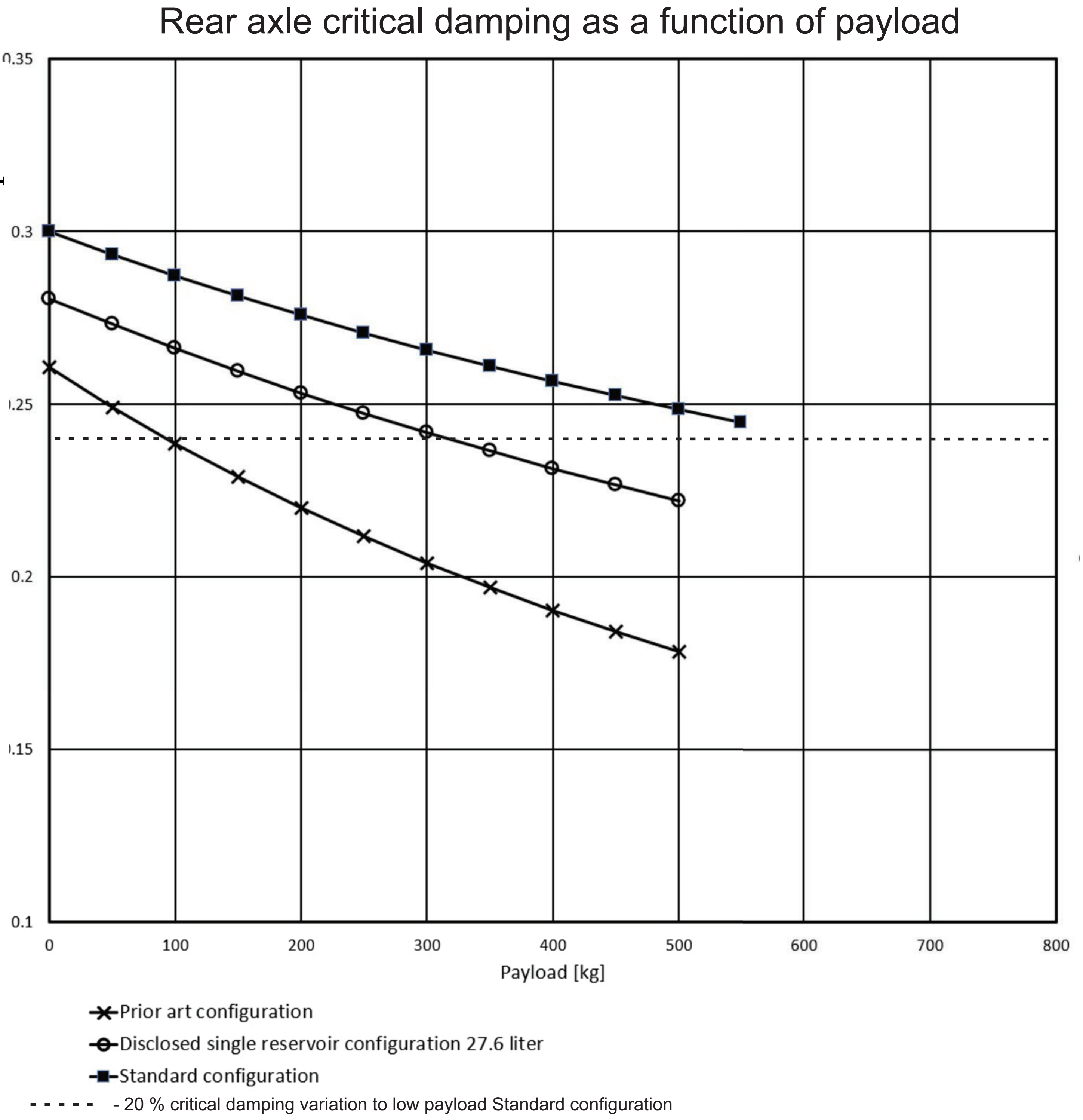
Rear axle critical damping as a function of payload
0.35
0.3
.25
0.2
.15
0.1
0
100
200
300
400
500
600
700
800
Payload [kg]
Prior art configuration
Disclosed single reservoir configuration 27.6 liter
Standard configuration
- 20 % critical damping variation to low payload Standard configuration

FIGURE 12

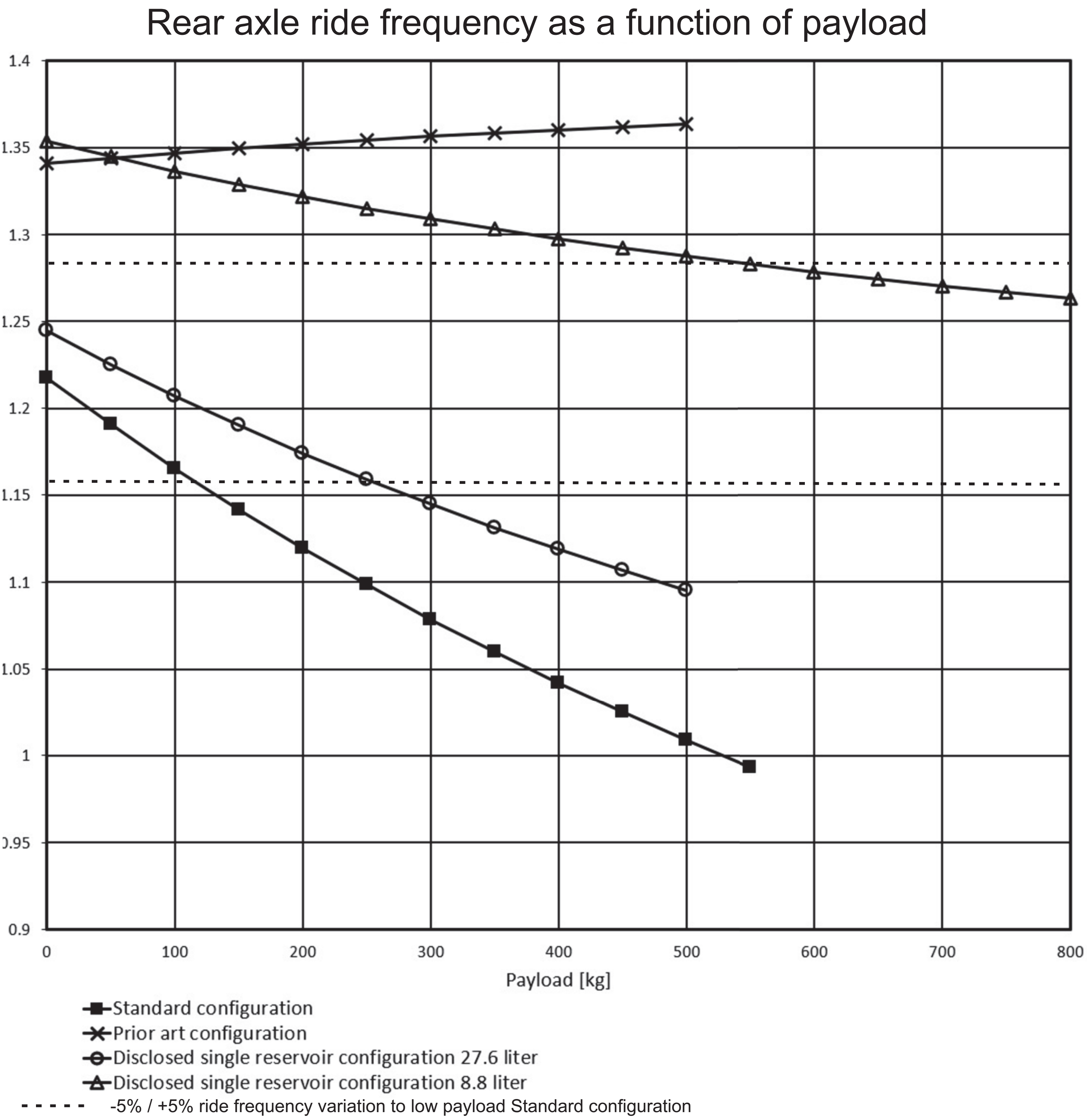
Rear axle ride frequency as a function of payload
1.4
1.35
1.3
1.25
1.2
1.15
1.1
1.05
1
0.95
0.9
0
100
200
300
400
500
600
700
800
Payload [kg]
Standard configuration
Prior art configuration
Disclosed single reservoir configuration 27.6 liter
Disclosed single reservoir configuration 8.8 liter
-5% / +5% ride frequency variation to low payload Standard configuration

FIGURE 13

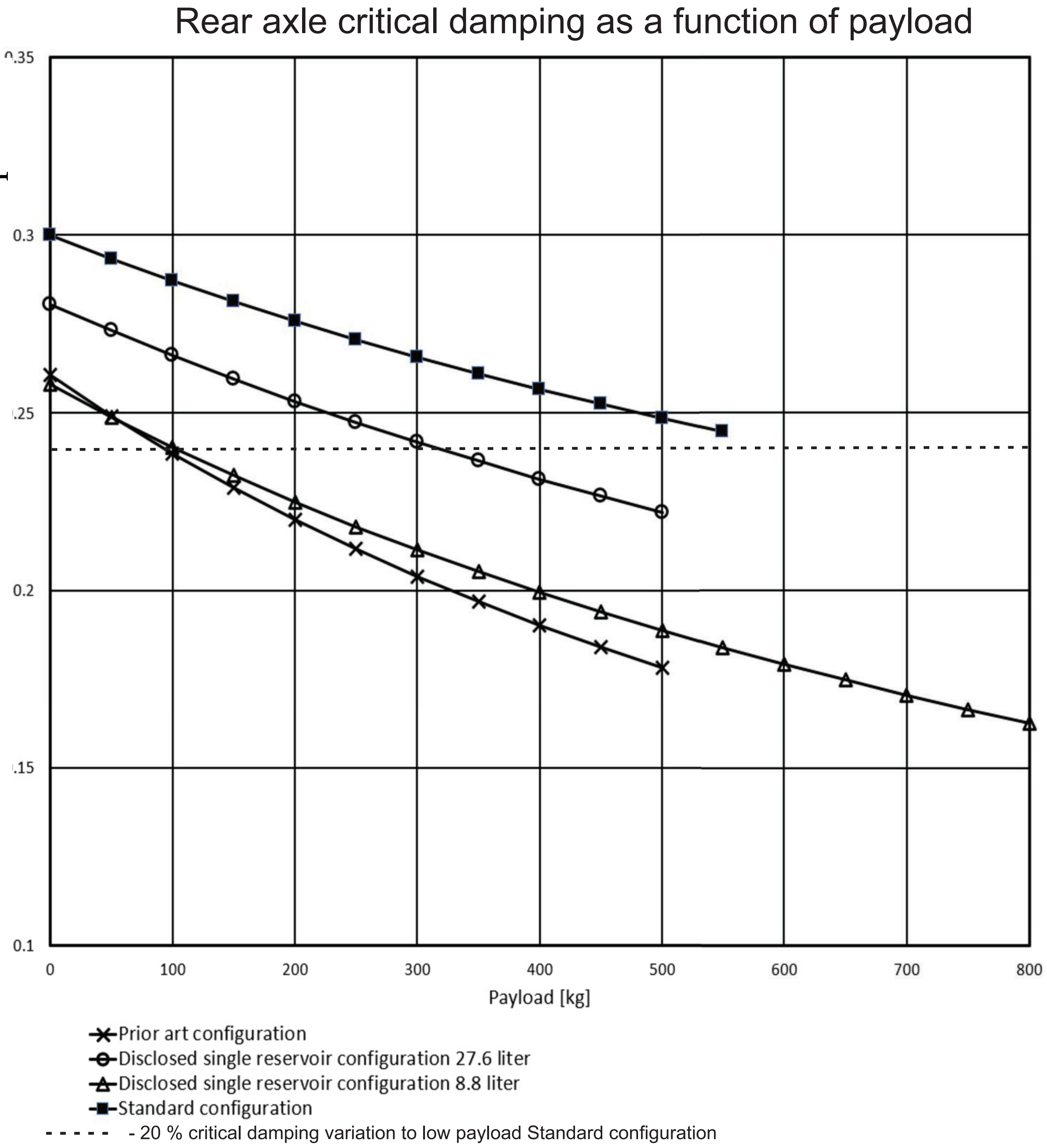
Rear axle critical damping as a function of payload
.35
0.3
.25
0.2
.15
0.1
0
100
200
300
400
500
600
700
800
Payload [kg]
Prior art configuration
Disclosed single reservoir configuration 27.6 liter
Disclosed single reservoir configuration 8.8 liter
Standard configuration
- 20 % critical damping variation to low payload Standard configuration

FIGURE 14

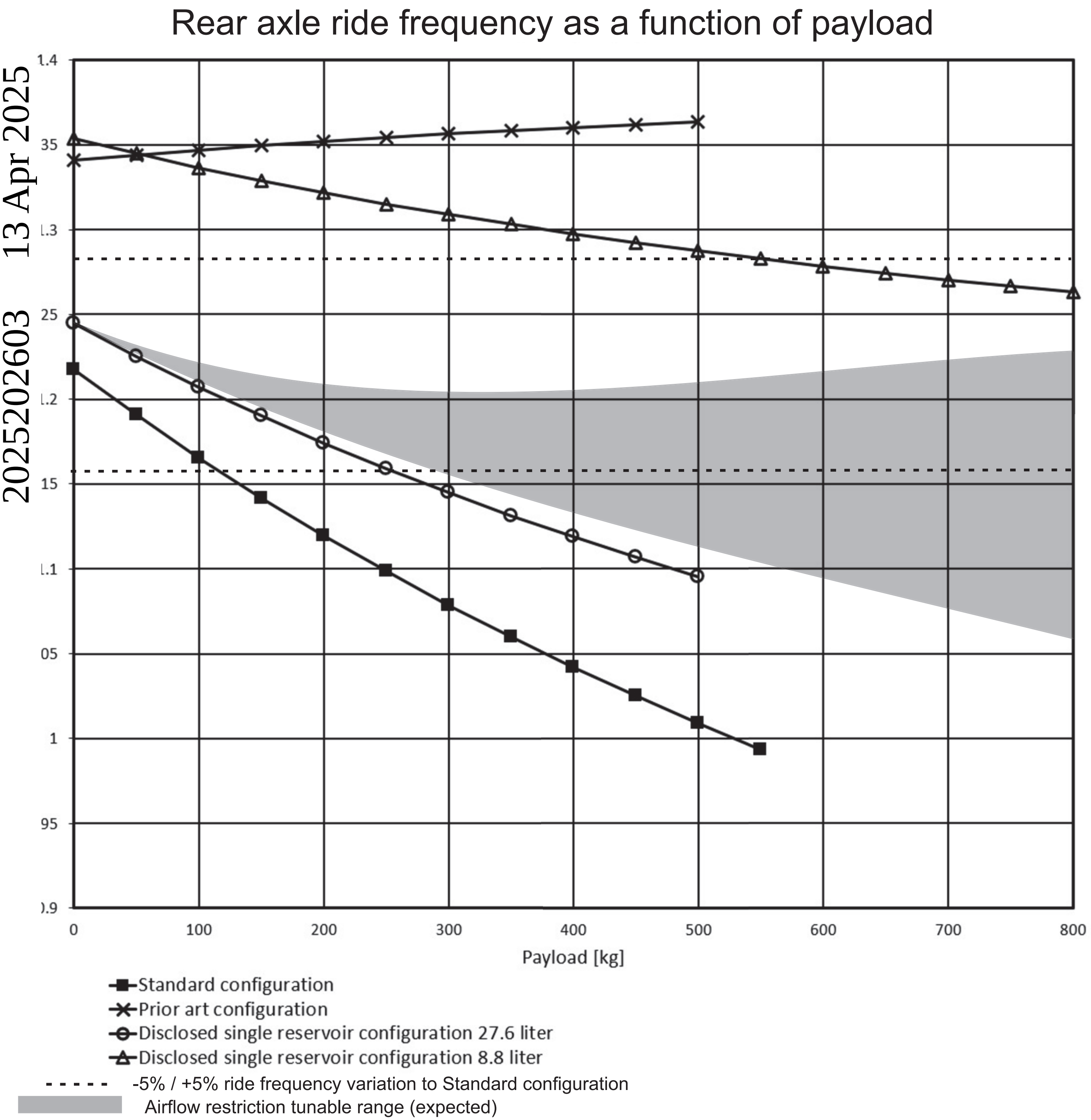
Rear axle ride frequency as a function of payload
1.4
35
.3
25
.2
15
.1
05
1
95
.9
0
100
200
300
400
500
600
700
800
Payload [kg]
Standard configuration
Prior art configuration
Disclosed single reservoir configuration 27.6 liter
Disclosed single reservoir configuration 8.8 liter
-5% / +5% ride frequency variation to Standard configuration
Airflow restriction tunable range (expected)

FIGURE 15

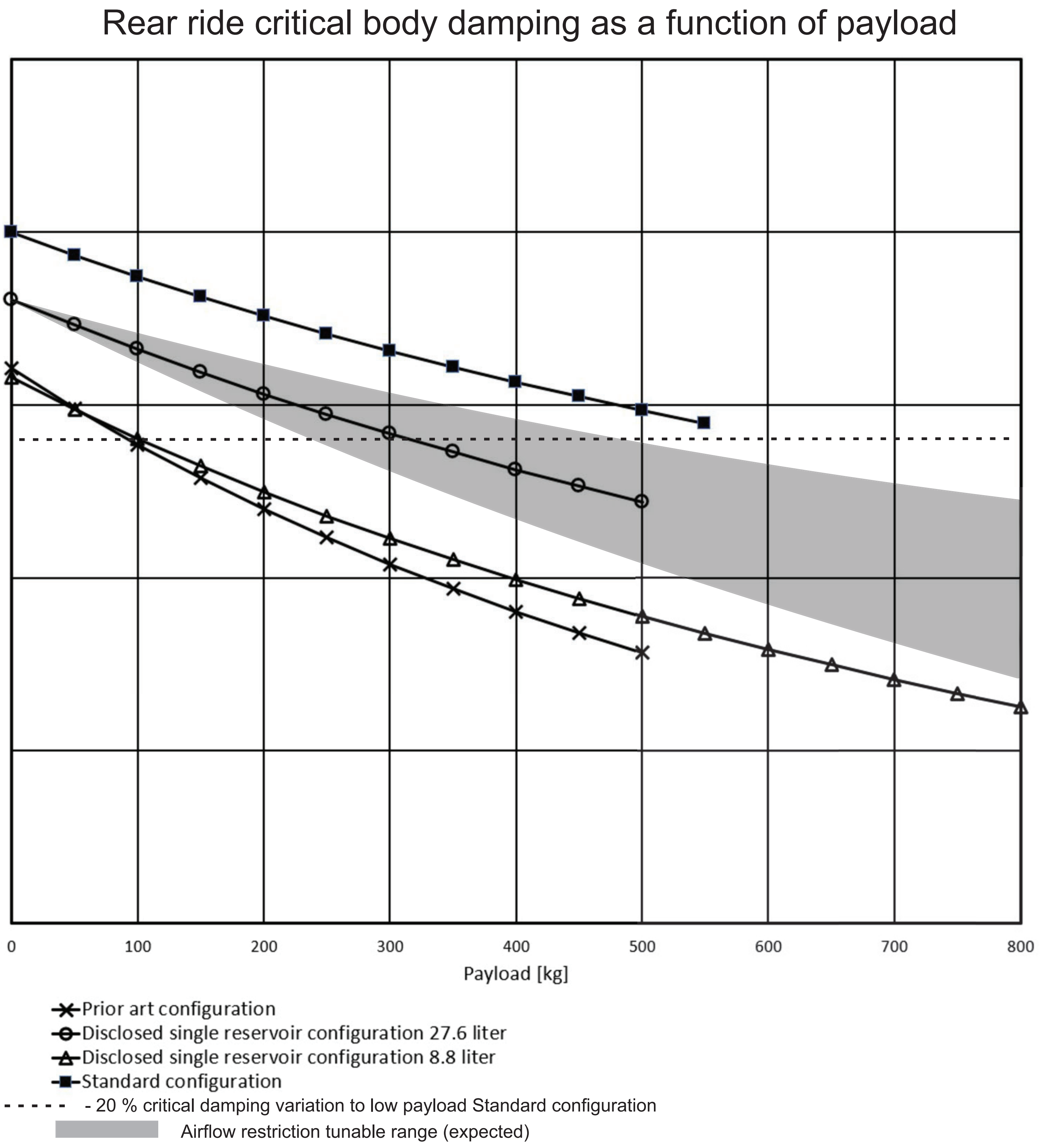
Rear ride critical body damping as a function of payload
0.35
0
100
200
300
400
500
600
700
800
Payload [kg]
Prior art configuration
Disclosed single reservoir configuration 27.6 liter
Disclosed single reservoir configuration 8.8 liter
Standard configuration
- 20 % critical damping variation to low payload Standard configuration
Airflow restriction tunable range (expected)

FIGURE 16

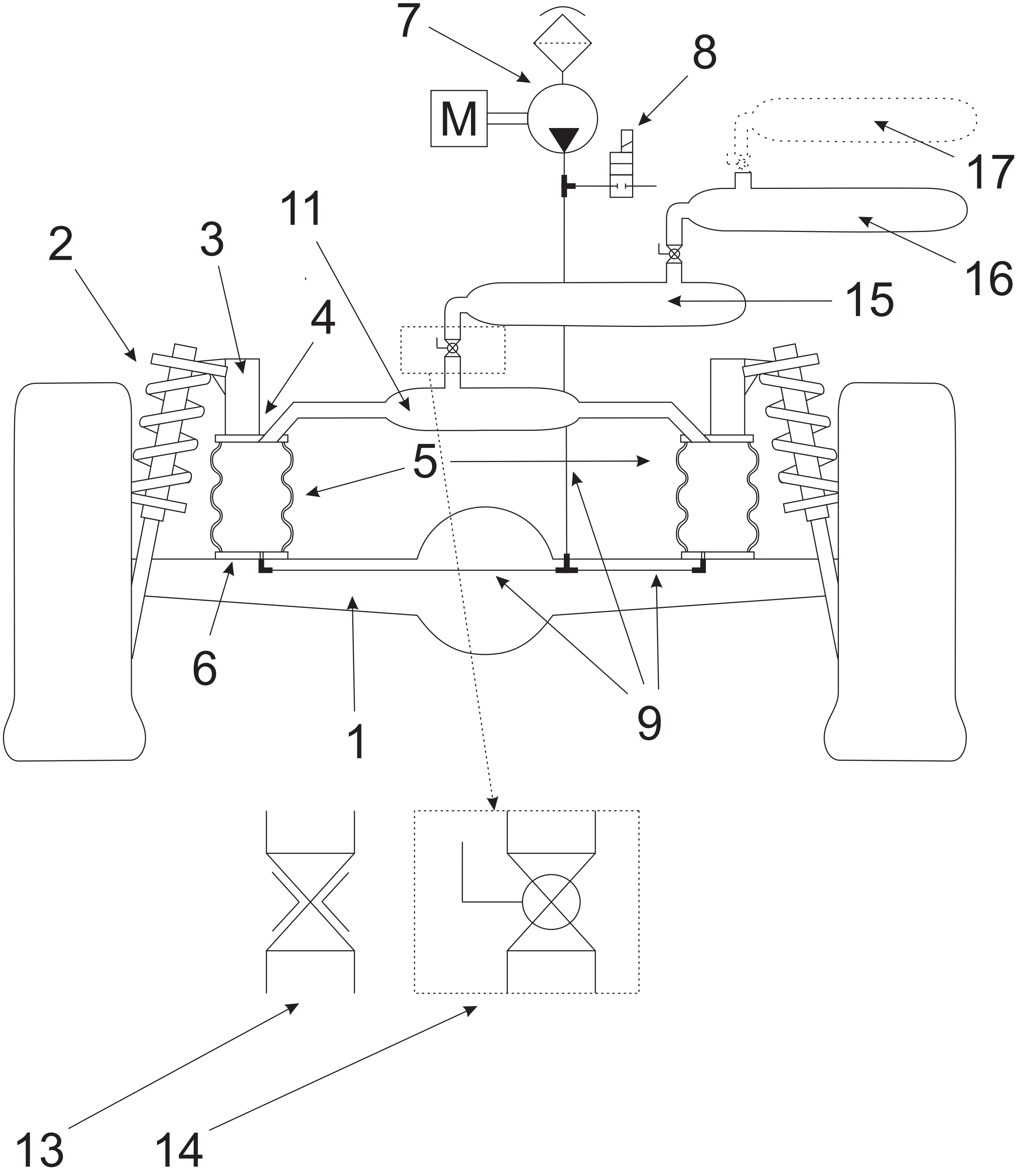

FIGURE 17

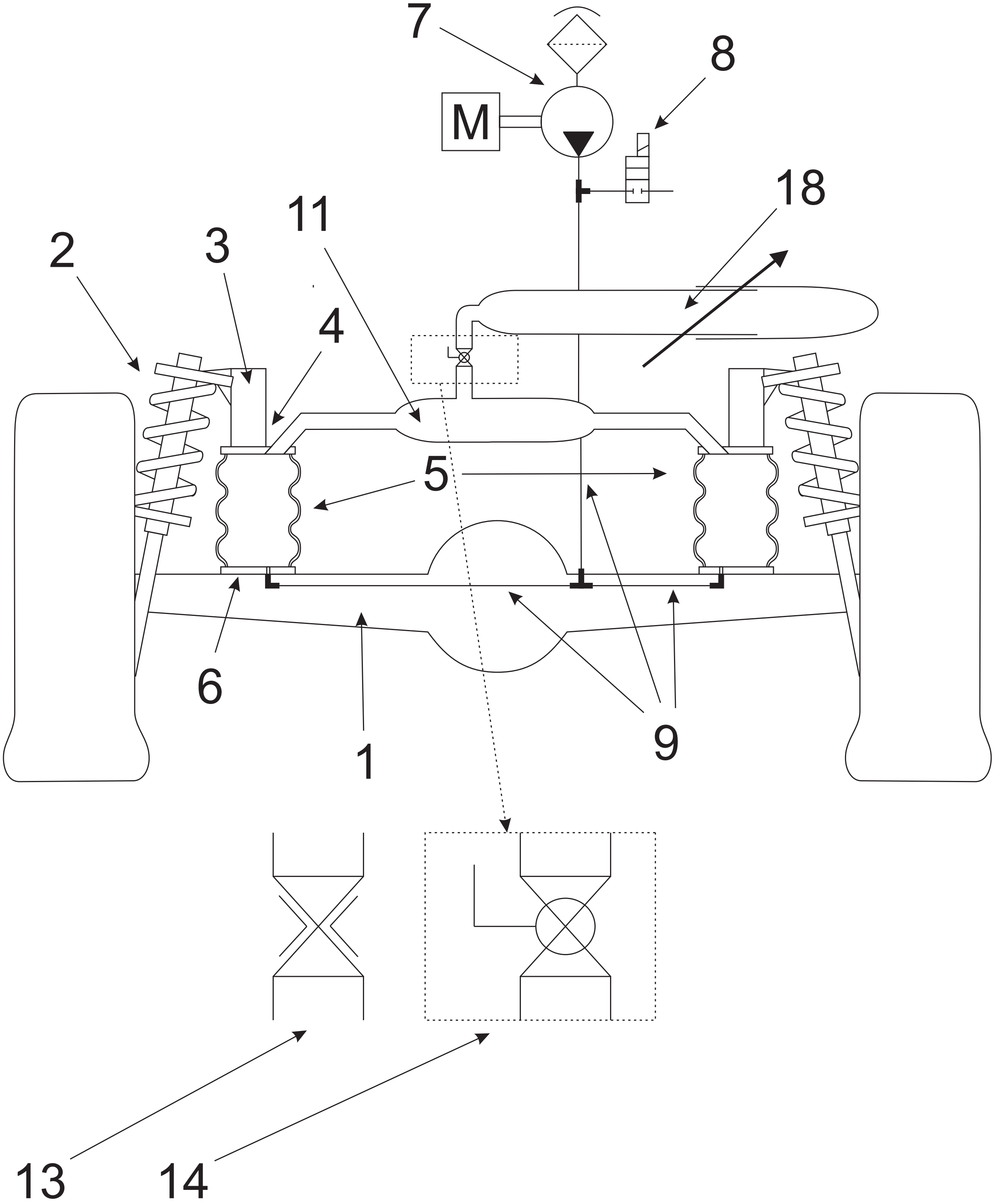

FIGURE 18

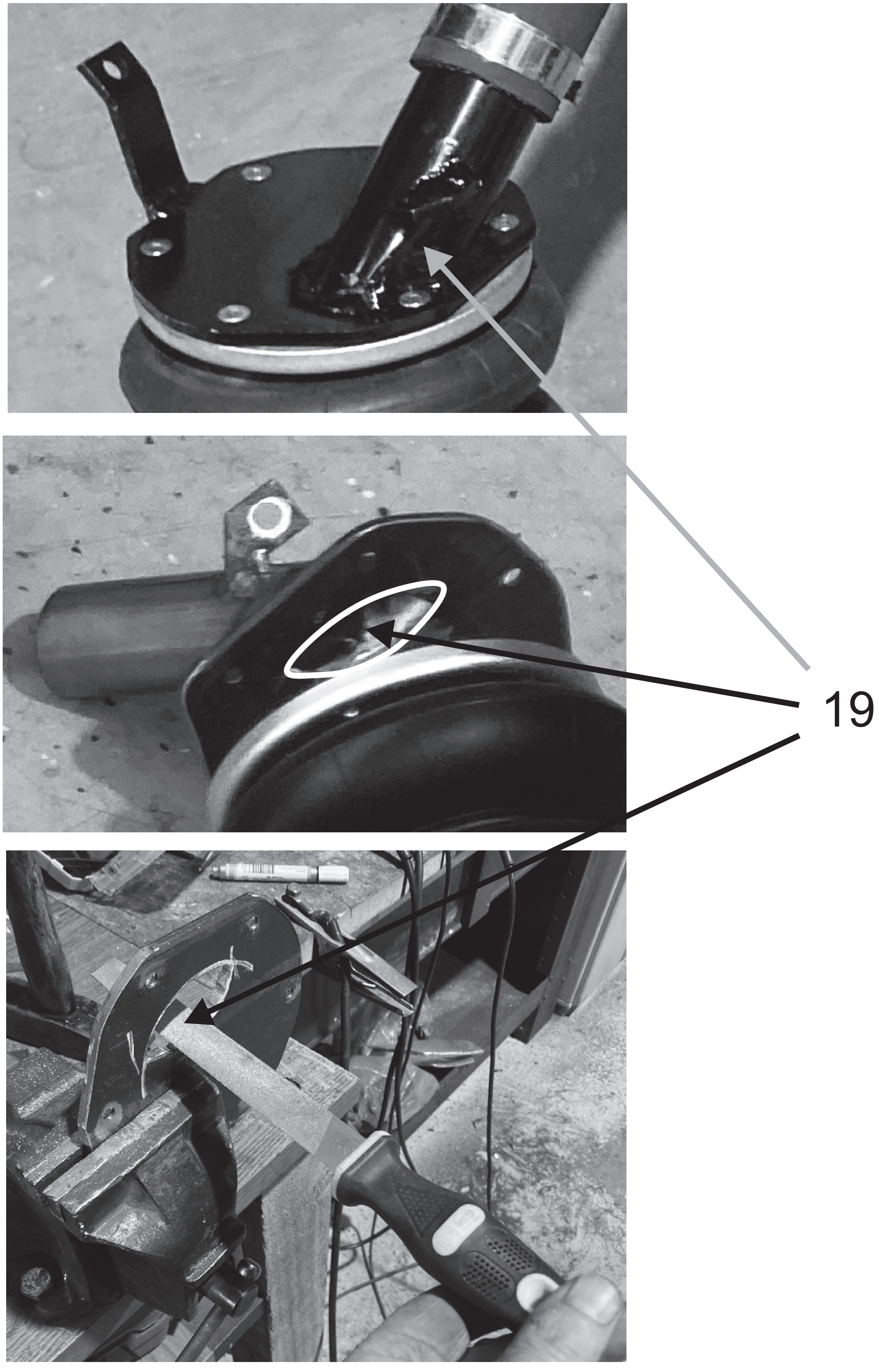

FIGURE 19

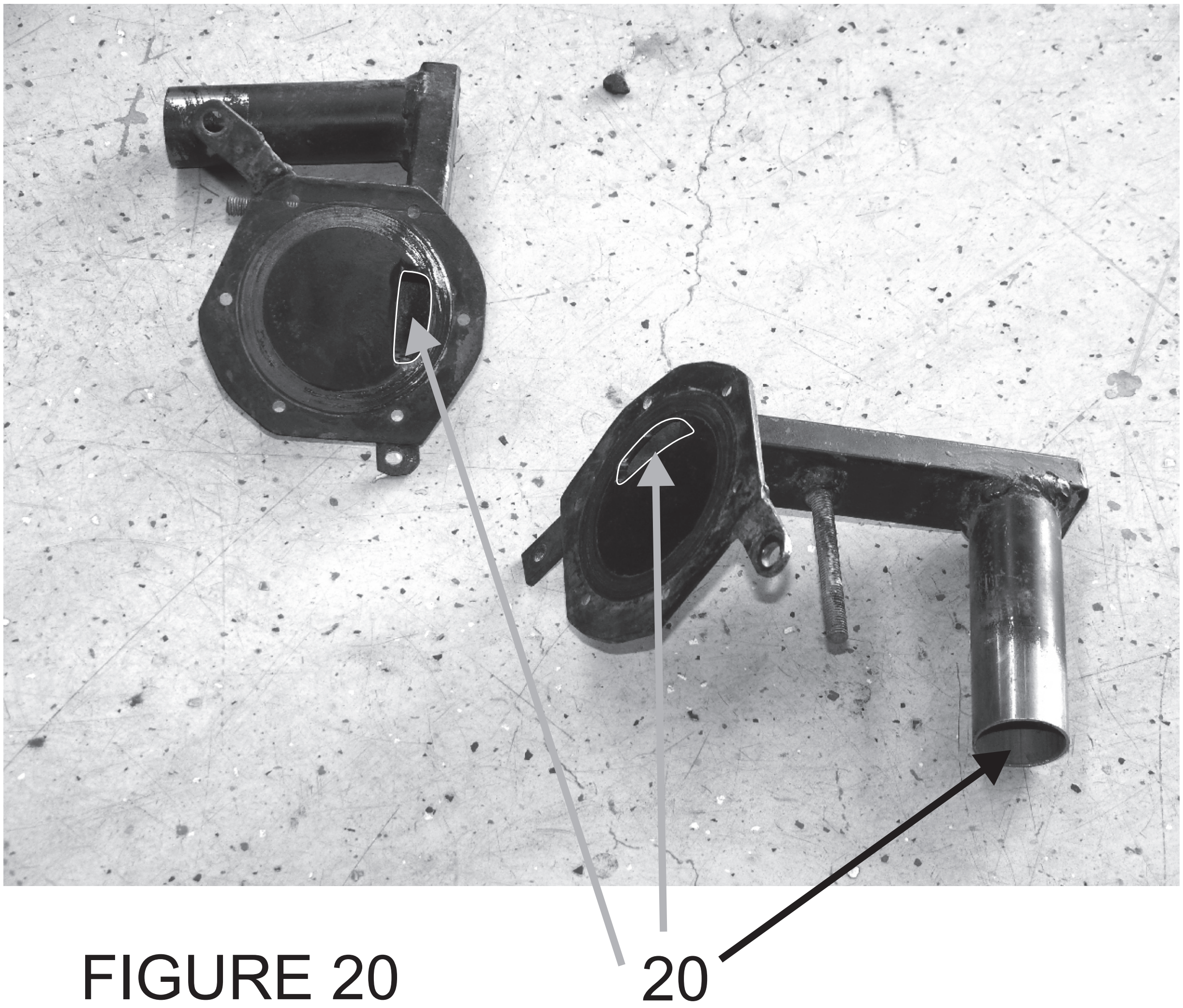

FIGURE 20

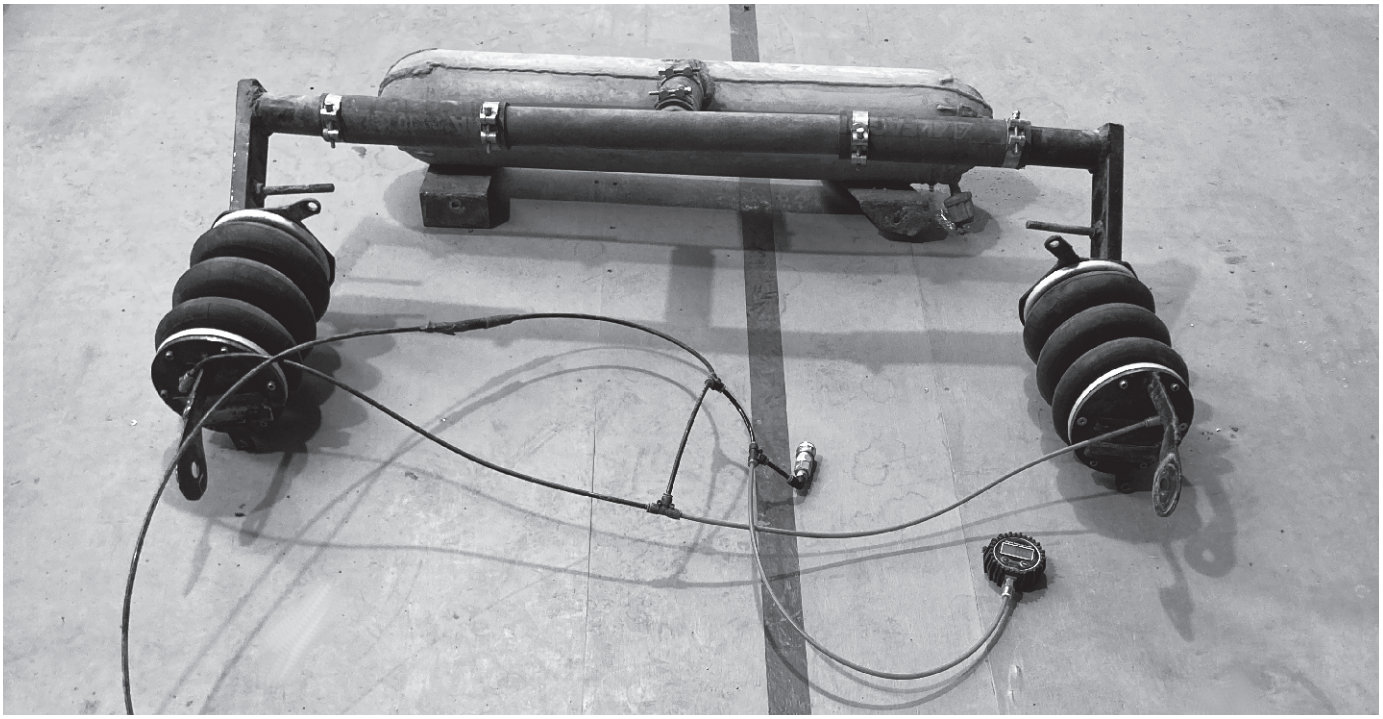

FIGURE 21

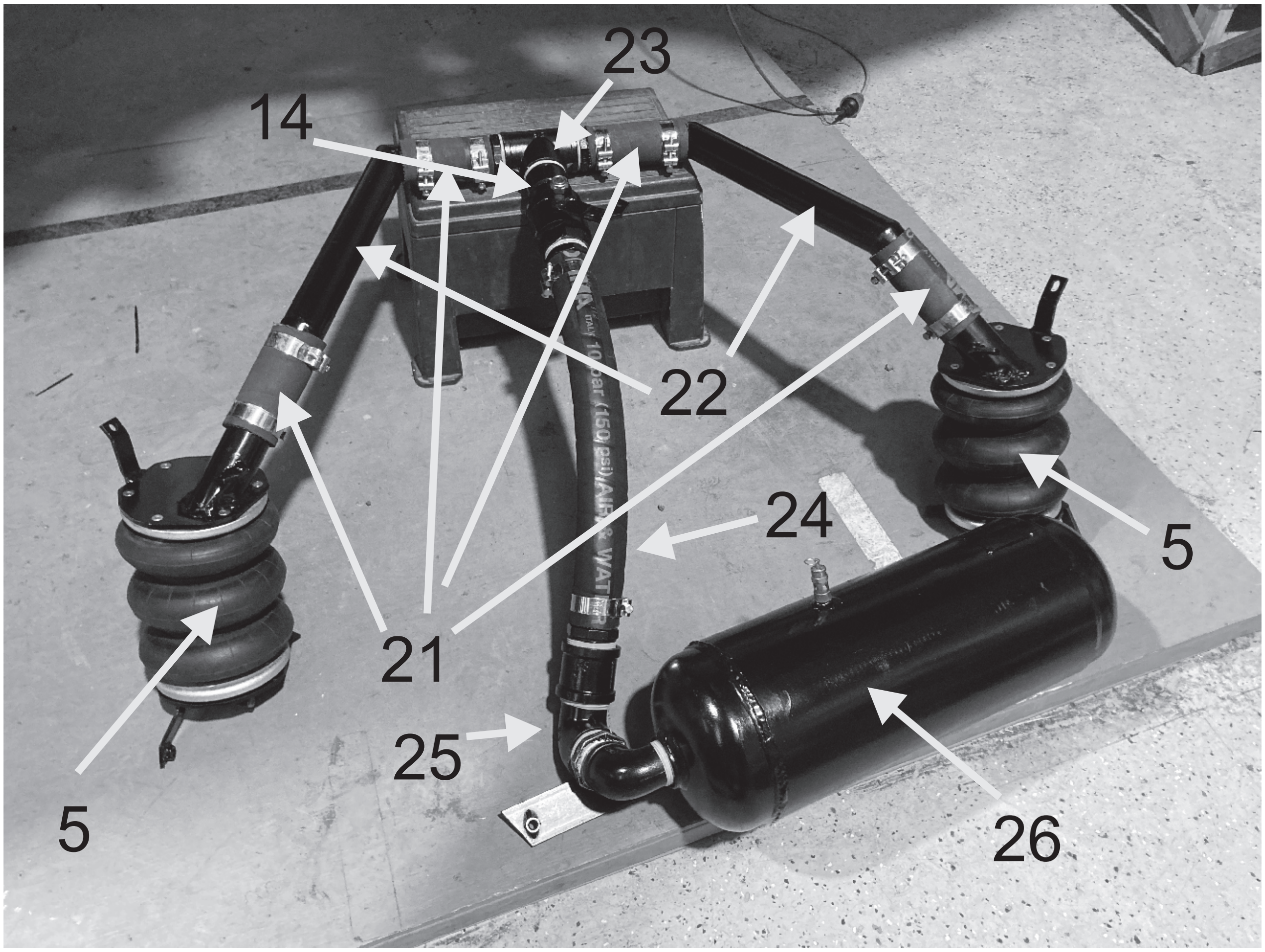

FIGURE 22

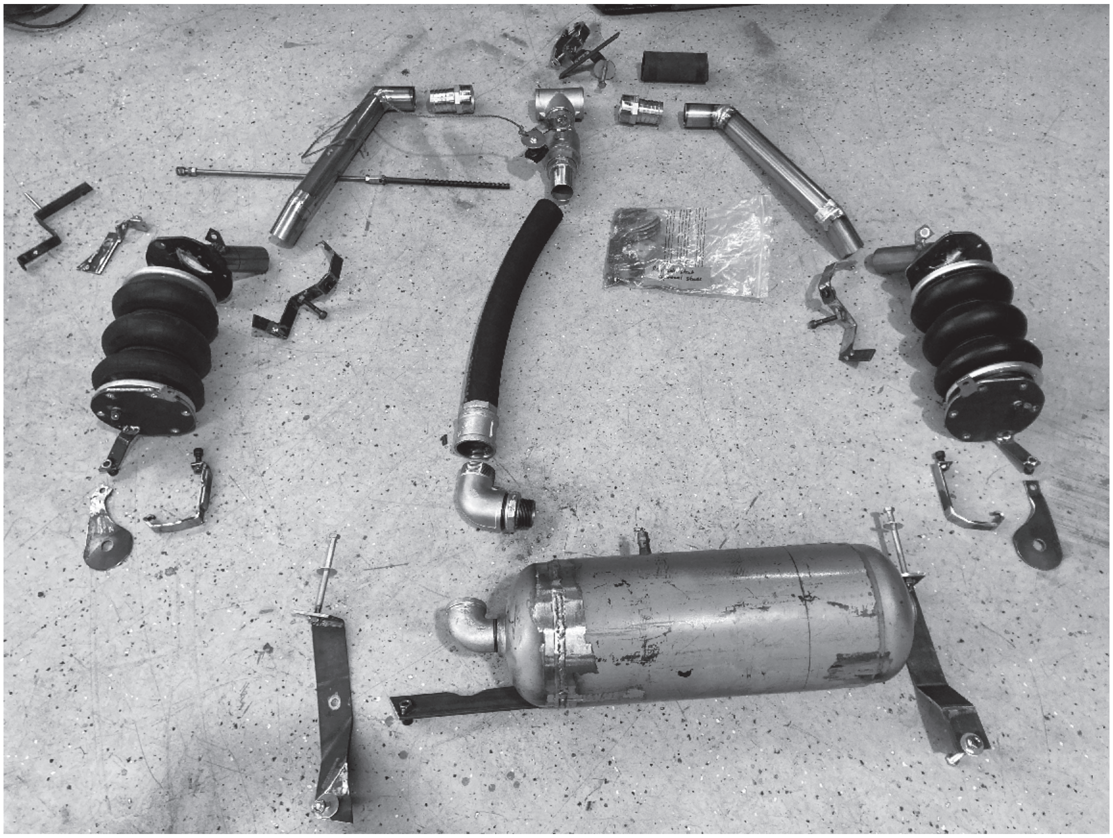

FIGURE 23

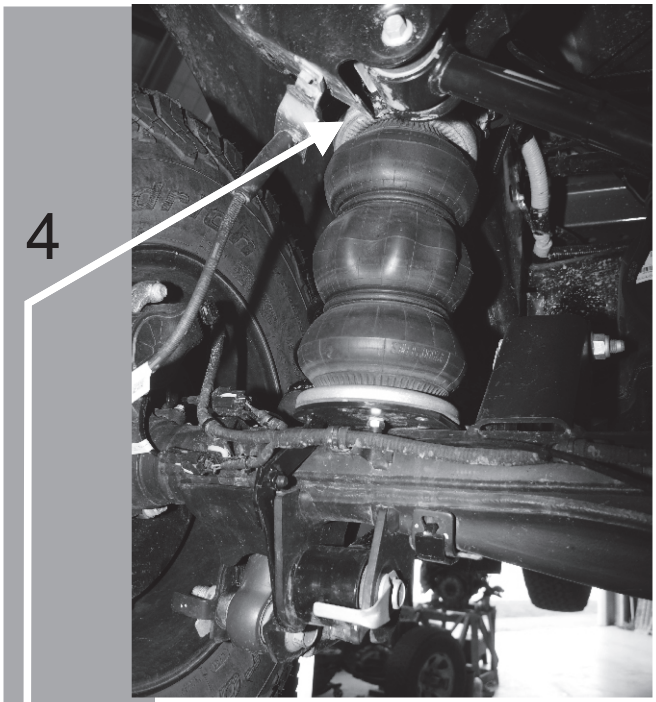

FIGURE 24

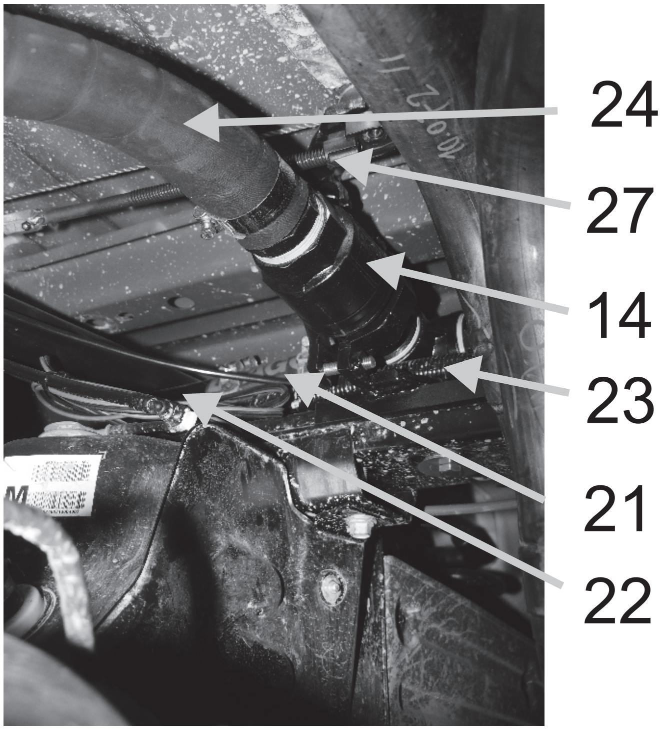

FIGURE 25

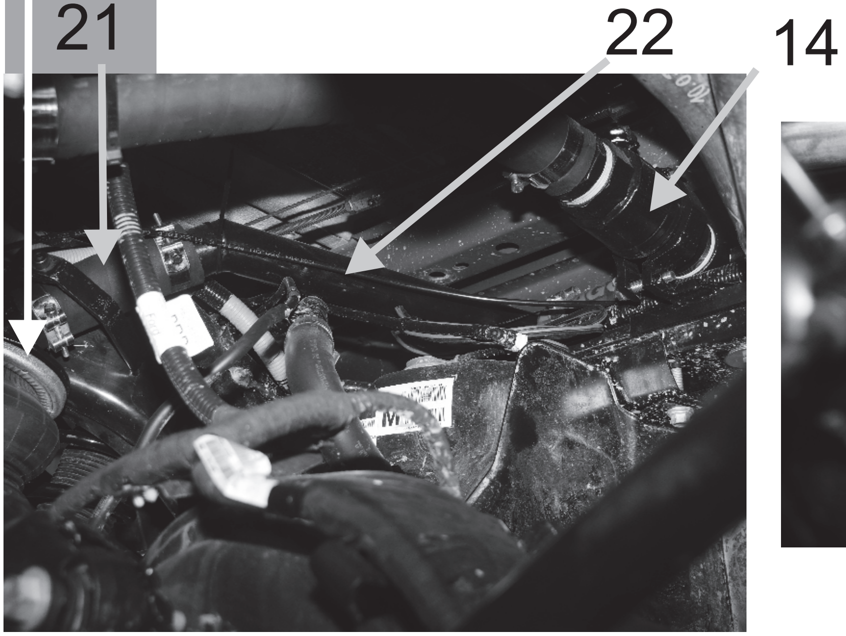

FIGURE 26

FIGURE 27

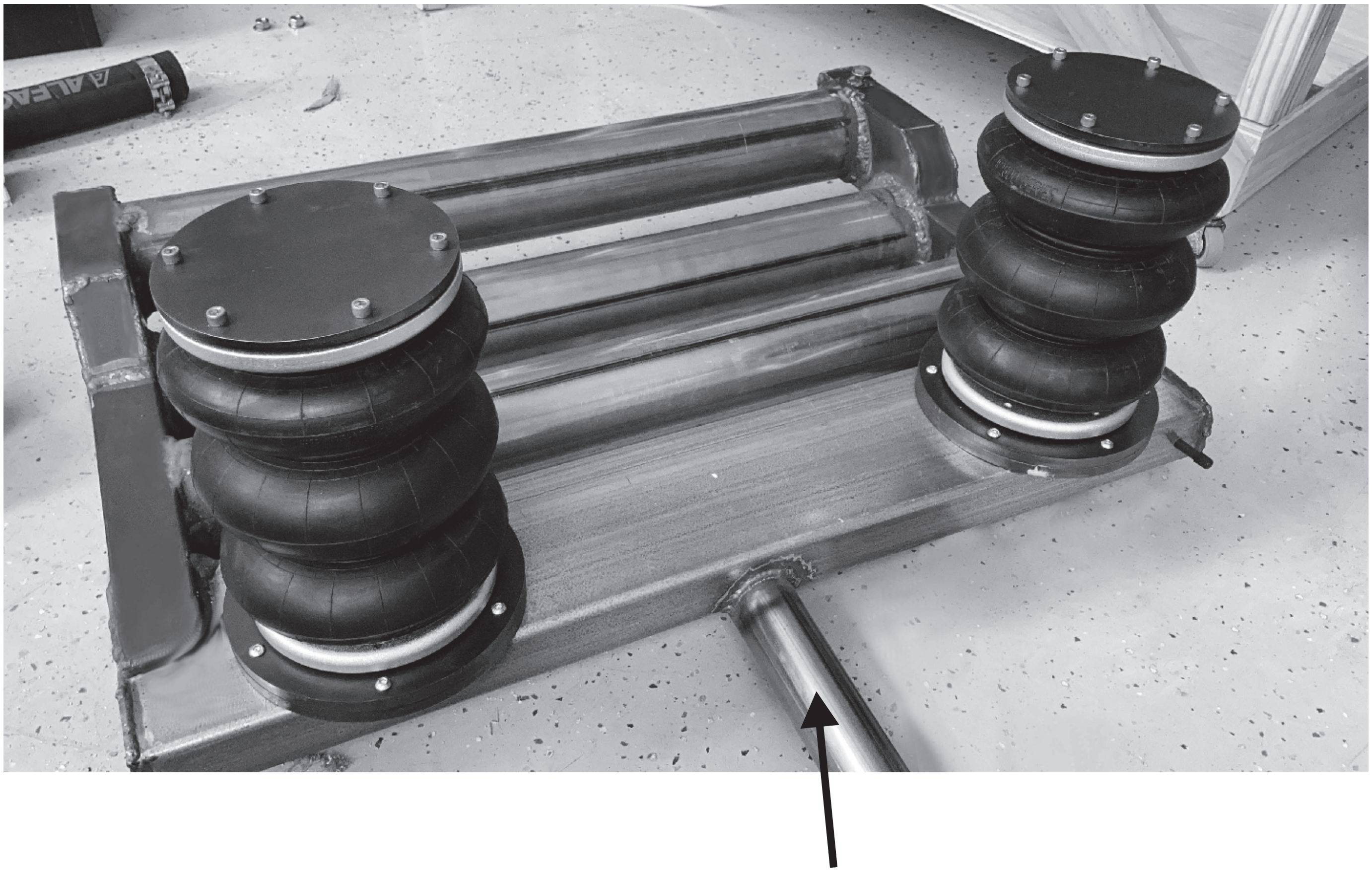

FIGURE 28